| DESIGNATOR | QTY | PART NUMBER | DESCRIPTION |
|---|---|---|---|
| | | | |
| F 97 | 2 | 770-07385 | STRAINER-BASKET TYPE 3 CL150&300 |
| MV 75 | 2 | 334-07274 | VALVE-BALL SVF 3 CL150 CS FIRE |
| CV 51 | 2 | 336-07261 | VALVE-CHECK KF 3 WAFER CL150 |
| PR 1 | 1 | 991-07671 | REG-2"CL150 35-125#SPRG 1098H-EGR |

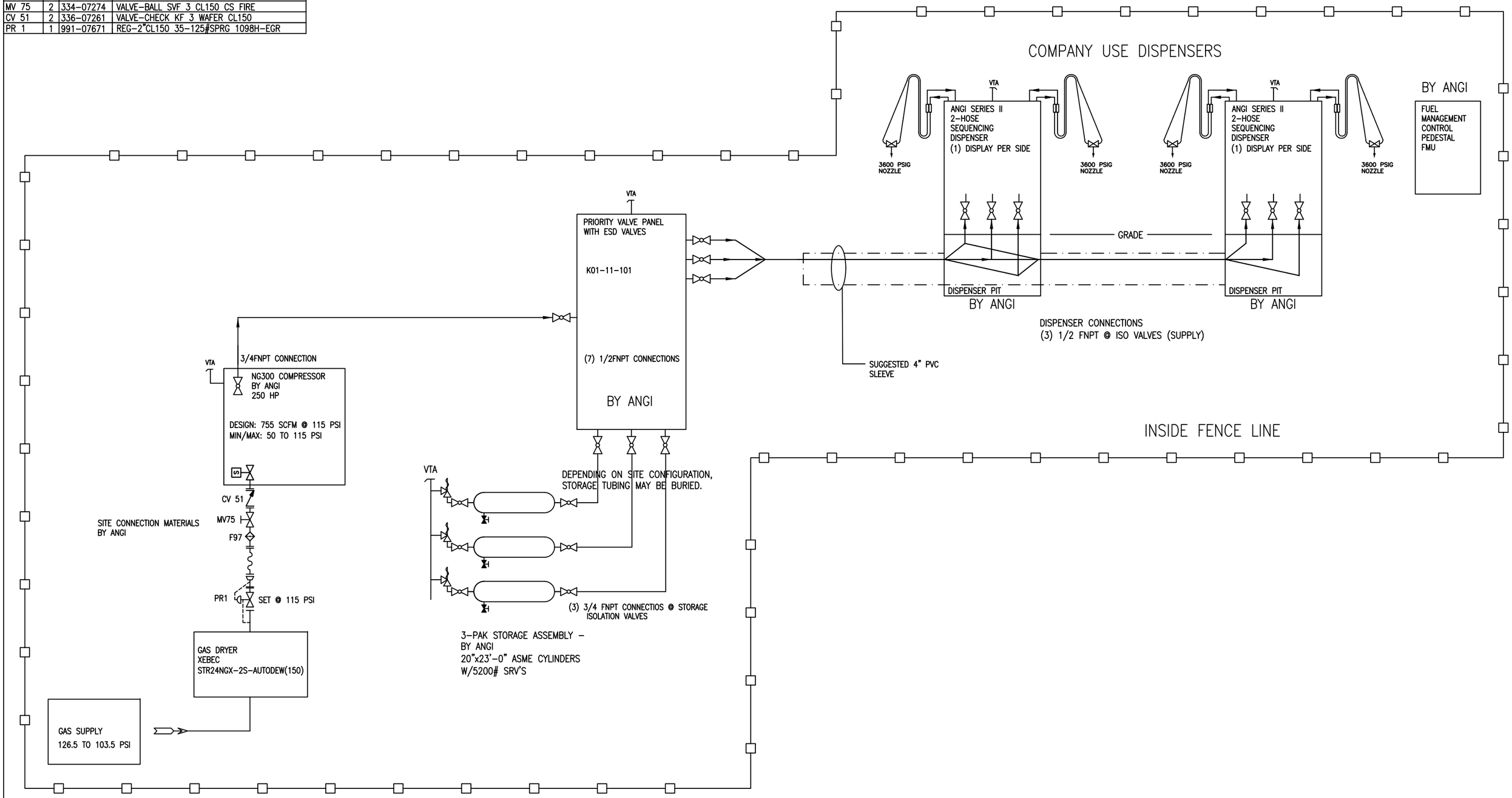


| REV | DATE/BY | DESCRIPTION | REV | DATE/BY | DESCRIPTION |
|---|---|---|---|---|---|
| D | 6/14/12 HMR | ADDED DRYER PER CUSTOMER REQUEST SEE ECN #120614-01 | | | |
| C | 4/20/12 ADM | COMPLETED TBD FOR PR1 | | | |
| B | 2/10/12 ADM | REMOVED PUBLIC DISPENSER | | | |
| A | 1/23/12 ADM | MOVED DISPENSER VENTS TO TOP OF DISP | E | 9/5/12 ADM | CLARIFIED SITE MATERIAL CONNECTIONS |


ANGI ENERGY SYSTEMS
15 PLUMB STREET
MILTON, WI 53563
PH: 608-868-4626
FX: 608-868-2723



THIS DRAWING AND ALL INFORMATION THEREIN IS THE SOLE PROPERTY OF ANGI AND SHOULD NOT BE COPIED, REPRODUCED, OR SUBMITTED TO OTHERS WITHOUT WRITTEN AUTHORIZATION. ALL REPRODUCTIONS ARE SUBJECT TO RETURN ON DEMAND.


UNLESS OTHERWISE SPECIFIED
BREAK SHARP EDGES
ALL DIMENSIONS IN INCHES

| | |
|---|---|
| FRACTIONAL | ±.125 |
| TWO PLACE DECIMAL | ±.010 |
| THREE PLACE DECIMAL | ±.005 |
| ANGLES | ±1° |

| | | | |
|---|---|---|---|
| TITLE | SITE P&ID – COMPANY AND PUBLIC USE FAST FILL SYSTEM | | |
| CUSTOMER | PIONEER NATURAL GAS – BIVENS | PROJECT NO. | 30974 |
| SHEET 1/1 | SCALE NA | DRAWING NO. | REV. |
| DRAWN BY HMR | DATE 05 DEC 11 | A05-03-30974 | E |

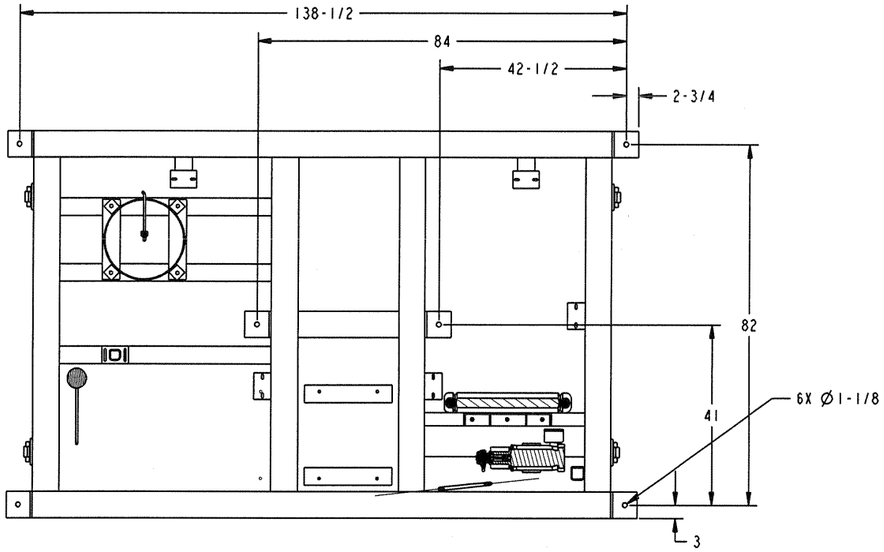


SECTION **A-A**
ANCHOR BOLT LOCATIONS

## COMPRESSOR DATA

WEIGHT: 15,000 LBS.

TYPE: ARIEL RECIPROCATING COMPRESSOR, JGQ/2 4-STAGE
CYLINDERS MAY VARY FROM THOSE SHOWN.

CLEARANCE: ALLOW 36" MINIMUM ON ALL SIDES FOR ACCESS UNLESS OTHERWISE INDICATED.

MOUNTING: REQUIRES SIX (6) 1" DIAMETER ANCHOR BOLTS (NOT PROVIDED). GROUTING THE COMPRESSOR TO THE CONCRETE PAD IS NOT RECOMMENDED.

LIFTING: MINIMUM 13' SPREADER BAR IS REQUIRED. UTILIZE FOUR (4) LIFT RINGS.

SHIPPING: VENT STACK, 3" INLET VALVE, AND 1/4" ACTUATOR TUBING ARE REMOVED FOR SHIPPING.

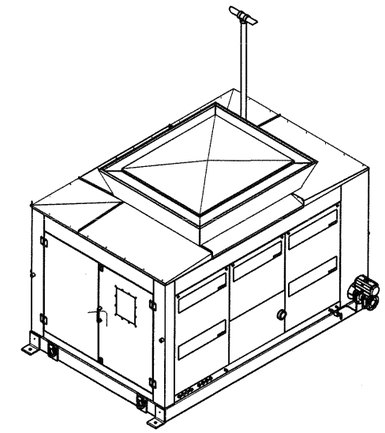

SCALE 0.031

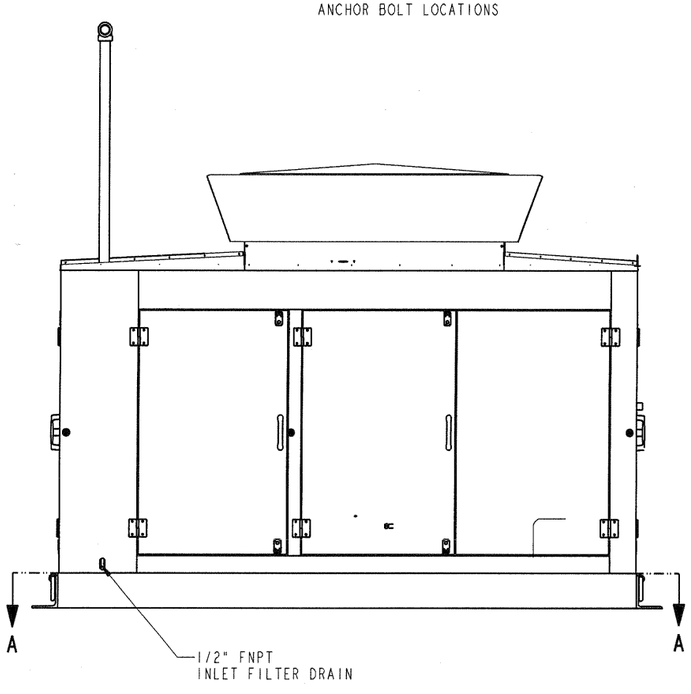


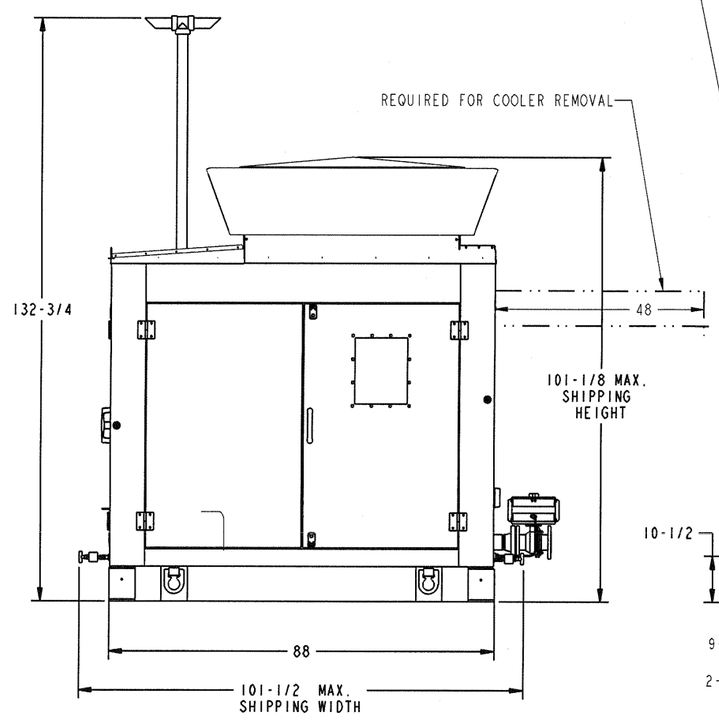


SCALE 0.063

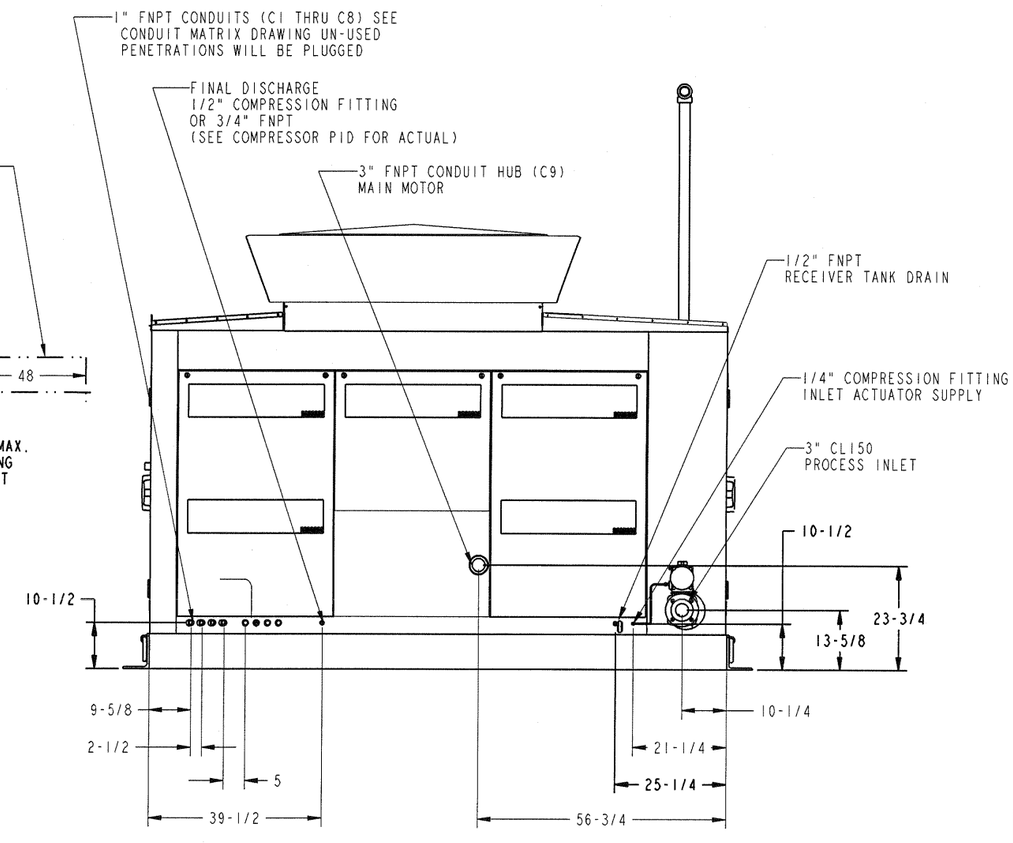


| REV | DATE/BY | DESCRIPTION |
|---|---|---|
| B | 11/18/11 ADM | REVISED FINAL DISCHARGE CALLOUT |
| A | 5/07/11 ADM | INITIAL RELEASE |

ANGI ENERGY SYSTEMS
15 PLUMB STREET
MILTON, WI 53563
PH: 608-868-4628
FX: 608-868-2123

THIS DRAWING AND INFORMATION THEREIN IS THE SOLE PROPERTY OF ANGI AND SHOULD NOT BE COPIED, REPRODUCED OR SUBMITTED TO OTHERS WITHOUT WRITTEN AUTHORIZATION. ALL REPRODUCTIONS ARE SUBJECT TO RETURN ON DEMAND

UNLESS OTHERWISE SPECIFIED
BREAK SHARP EDGES
ALL DIMENSIONS IN INCHES
FRACTIONAL ±.125
TWO PLACE DECIMAL ±.010
THREE PLACE DECIMAL ±.005
ANGLES ±1°

TITLE: GENERAL ARRANGEMENT - NG300ES4Q WITH ENCLOSURE AND 3" CL150 INLET

CUSTOMER:

PROJECT NO.: STANDARD

SHEET: 1 of 2

SCALE: 0.027

DRAWN BY: ADM

DATE: 5/18/2011

DRAWING NO.: GAD-NG300ES4Q-3E

REV.: B

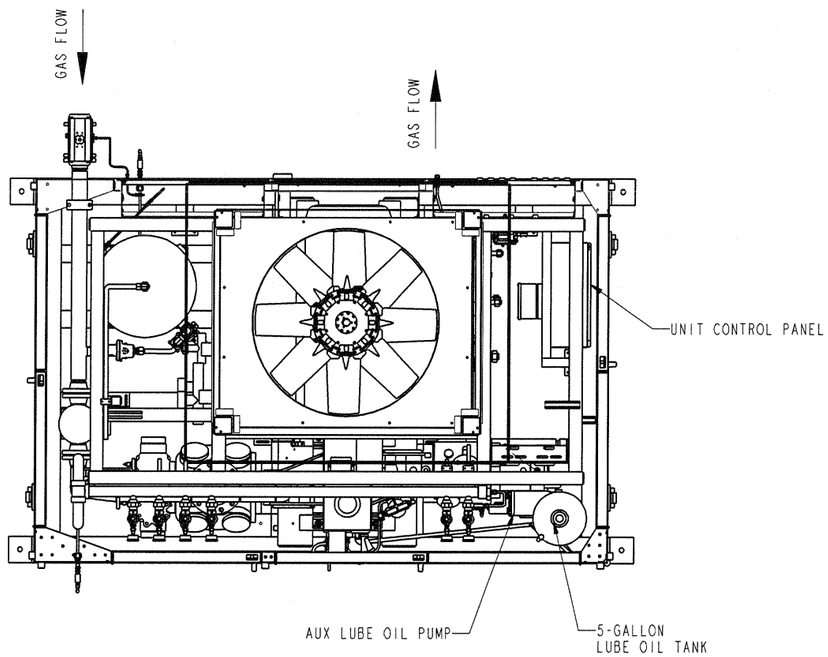


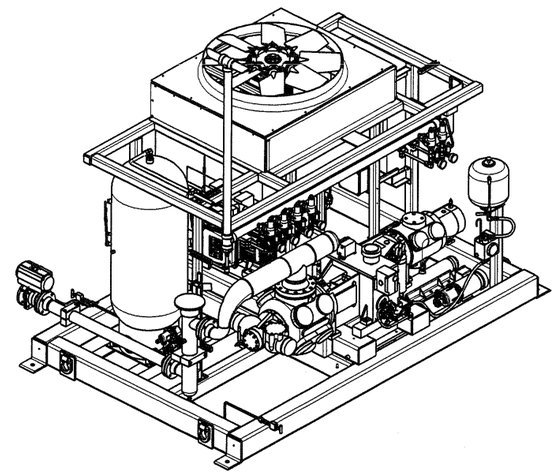

SCALE 0.047

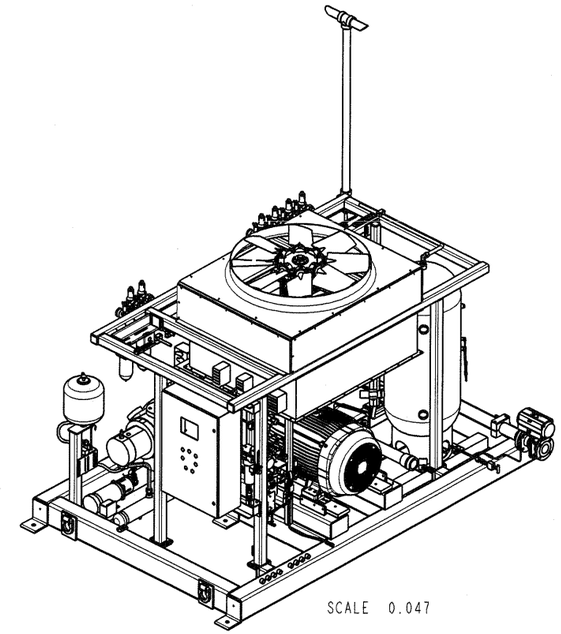

SCALE 0.047

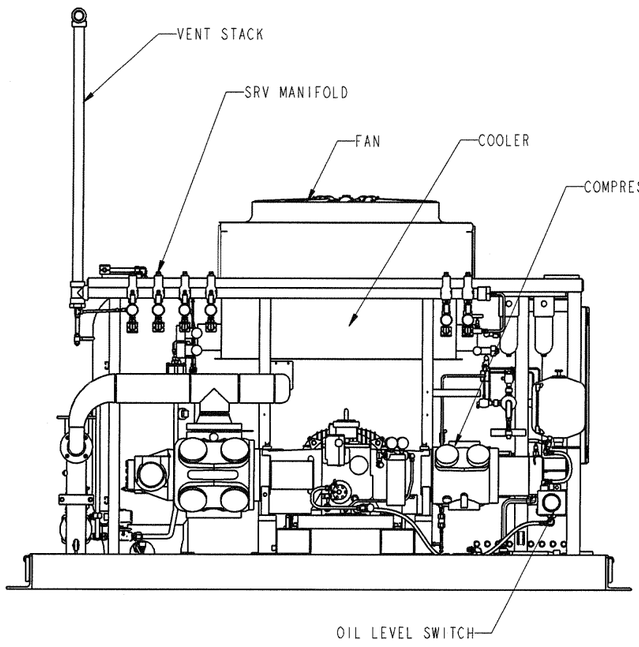


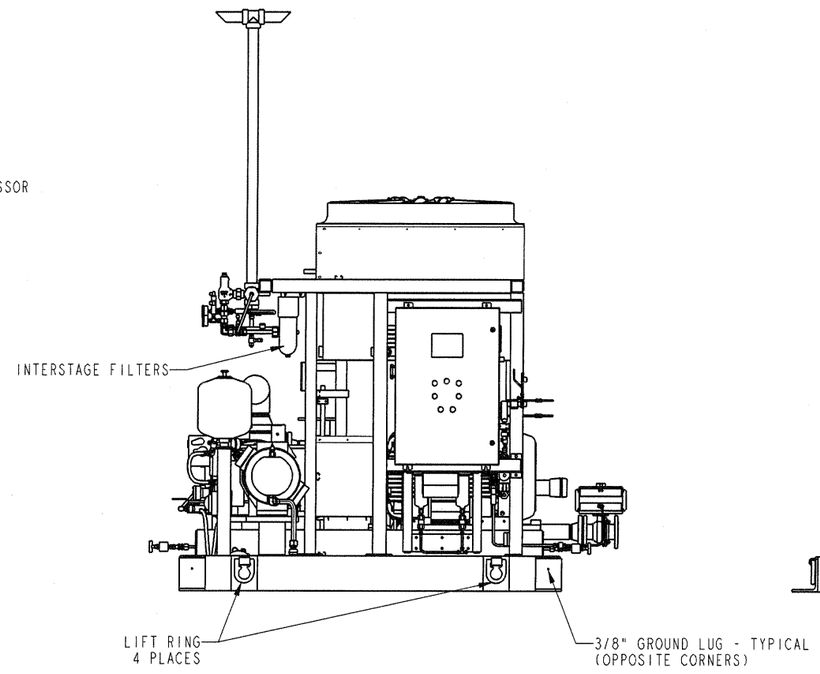


SCALE 0.063

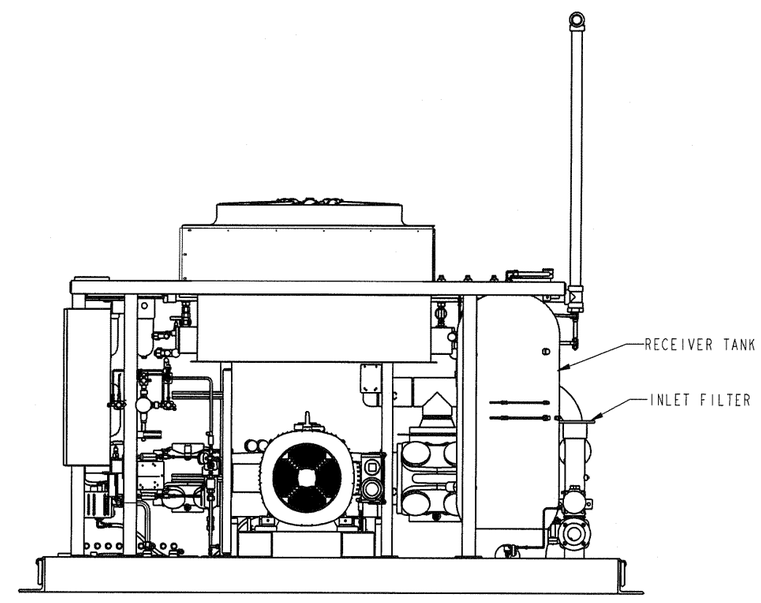


*SUBMITTAL RELEASE ONLY*

*DO NOT MANUFACTURE TO THIS PRINT*

ANGI ENERGY SYSTEMS
15 PLUMB STREET
MILTON, NJ 53563
PH: 608-868-4626
FX: 608-868-2723

THIS DRAWING AND INFORMATION THEREIN IS THE SOLE PROPERTY OF ANGI ANDI SHOULD NOT BE COPIED, REPRODUCED OR SUBMITTED TO OTHERS WITHOUT WRITTEN AUTHORIZATION. ALL REPRODUCTIONS ARE SUBJECT TO RETURN ON DEMAND.

UNLESS OTHERWISE SPECIFIED
BREAK SHARP EDGES
ALL DIMENSIONS IN INCHES
FRACTIONAL ±.125
TWO PLACE DECIMAL ±.010
THREE PLACE DECIMAL ±.005
ANGLES ±1°

TITLE: GENERAL ARRANGEMENT - NG300ES4Q WITH ENCLOSURE AND 3" CL150 INLET

| CUSTOMER | | PROJECT NO. | |
|---|---|---|---|
| | | STANDARD | |
| SHEET 2 of 2 | SCALE 0.027 | DRAWING NO. GAD-NG300ES4Q-3E | REV. B |
| DRAWN BY ADM | DATE 5/18/2011 | | |

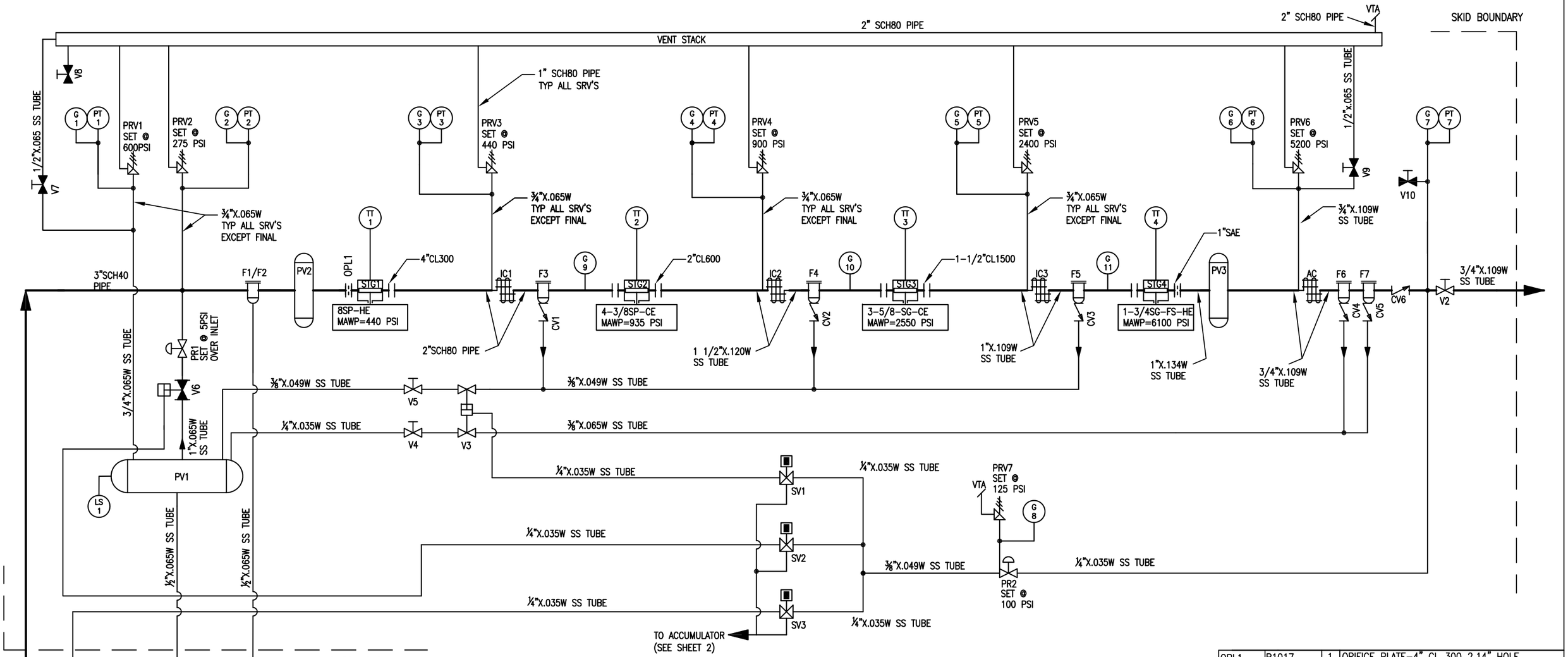


| DESIGNATOR | PART NUMBER | TOTAL QTY | DESCRIPTION |
|---|---|---|---|
| V11–V12 | 338–07241 | 2 | VALVE–NDL WIKA 1/2 FNPT 10,000# (MLV13) |
| V10 | 330–07281 | 1 | VALVE–PURGE 1/4 MNPT 6000# SS (BV7) |
| V8 | 334–07284 | 1 | VALVE–BALL MV 1/2 600# W/LOCK (MV167) |
| V7, V9 | 330–07231 | 2 | VALVE–PURGE 1/4 FML 6000# AG (BV3) |
| V6 | 334–07470 | 1 | VALVE/ACT–SVF 1 N.C. (MV265) |
| V4–V5 | 339–02423 | 2 | VALVE–BALL HOKE 1/4 6000# SS (MV2) |
| V3 | 334–07322 | 1 | VALVE/ACT–HOKE (2) 3/8 NO 5000# (MV124) |
| V2 | 334–07471 | 1 | VALVE–BALL SVF 3/4 6000# W/LOCK (MV266) |
| V1 | 334–07414 | 1 | VALVE/ACT–SVF 3CL150 CS (MV206) |
| TT1–TT4 | 700–08041 | 4 | RTD ASSY–400F MAX 5700# W/TWELL (RTD14) |
| SV1–SV3 | 330–07243 | 3 | VALVE–SOL 3WY 1/4 150# 120V NC (SV9) |
| PV3 | B02–88–001 | 1 | PULSATION BOTTLE, 218CU–IN, 6100# MAWP |
| PV2 | B02–16–020 | 1 | PULSATION BOTTLE–4 CL300x3 CL150 1060 CU–IN |
| PV1 | 944–07263 | 1 | TANK–VERT 100GAL 600# (PV80) |

| DESIGNATOR | PART NUMBER | TOTAL QTY | DESCRIPTION |
|---|---|---|---|
| PT6–7 | 410–07282 | 1 | TRANSD–AST 0–6000# IS/UL (PT50) |
| PT5 | 410–07281 | 1 | TRANSD–AST 0–3000# IS/UL (PT49) |
| PT3 | 410–07278 | 1 | TRANSD–AST 0–600# IS/UL (PT46) |
| PT2 | 410–07277 | 1 | TRANSD–AST 0–300# IS/UL (PT47) |
| PT1,PT4 | 410–07279 | 2 | TRANSD–AST 0–1000# IS/UL (PT47) |
| PSV7 | 331–04522 | 1 | VALVE–RELIEF 125# 1/4 ASME CSEAL (SRV37) |
| PRV6 | 331–08052 | 1 | VALVE–RELIEF 5200# C–ORF MERCER (SRV152) |
| PRV5 | 331–08042 | 1 | VALVE–RELIEF 2400# C–ORF MERCER (SRV142) |
| PRV4 | 331–08028 | 1 | VALVE–RELIEF 900# D–ORF MERCER (SRV128) |
| PRV3 | 331–08160 | 1 | VALVE–RELIEF 440# E–ORF MERCER (SRV252) |
| PRV2 | 331–08013 | 1 | VALVE–RELIEF 275# E–ORF MERCER (SRV113) |
| PRV1 | 331–08022 | 1 | VALVE–RELIEF 600# D–ORF MERCER (SRV122) |
| PR2 | 500–01674 | 1 | REG–MECO PRIMARY W/O ENV CAP15 (PR13) |
| PR1 | 991–07231 | 1 | REG–1"70–150#SPR 1/2ORF 627 (PR29) |

| DESIGNATOR | PART NUMBER | TOTAL QTY | DESCRIPTION |
|---|---|---|---|
| OPL1 | R1017 | 1 | ORIFICE PLATE–4" CL 300 2.14" HOLE |
| LS1 | 485–02138 | 1 | SWITCH–RECLVL MPHY L1100 EX1.5 (LLS7) |
| G8 | 741–07240 | 1 | GAUGE–PRES 200#/B BM PM GF WIKA (G22) |
| G6–G7 | 741–07289 | 2 | GAUGE–PRES 10000#/B BM PM GF WIKA (G57) |
| G5, G11 | 741–07245 | 2 | GAUGE–PRES 3000#/B BM PM GF WIKA (G27) |
| G3, G9 | 741–07243 | 2 | GAUGE–PRES 600#/B BM PM GF WIKA (G25) |
| G2 | 741–07241 | 1 | GAUGE–PRES 300#/B BM PM GF WIKA (G23) |
| G1,4,10 | 741–07251 | 3 | GAUGE–PRES 1000#/B BM PM GF WIKA (G33) |
| F7 | 772–07302 | 1 | FILTER–FINITE JS3B GR4 COALESCING (F172) |
| F6 | 772–07301 | 1 | FILTER–FINITE JS3B GR10 COALESCING (F171) |
| F5 | 772–07300 | 1 | FILTER–FINITE JS3B COALESCING (F170) |
| F4 | 772–07303 | 1 | FILTER–FINITE JS4C COALESCING (F173) |
| F3 | 772–07274 | 1 | FILTER–FINITE MS8S COALESCING (F101) |
| F2 | 770–07283 | 1 | ELEMENT–RSDL 13x30x150MESH (F52) |
| F1 | 770–07257 | 1 | FILTER–RSDL 3 CL150 W/O ELEMENT (F38) |
| CV6 | 336–07254 | 1 | VALVE–CHECK HOKE 3/4 FML 6000# (CV44) |
| CV1–CV5 | 336–07266 | 5 | VALVE–CHECK 3/8 FML SS 6000# (CV55) |

| REV | DATE/BY | DESCRIPTION | REV | DATE/BY | DESCRIPTION |
|---|---|---|---|---|---|
| * | | | | | |

ANGI ENERGY SYSTEMS

ANGI ENERGY SYSTEMS
15 PLUMB STREET
MILTON, WI 53563
PH: 608–868–4626
FX: 608–868–2723

THIS DRAWING AND ALL INFORMATION THEREIN IS THE SOLE PROPERTY OF ANGI AND SHOULD NOT BE COPIED, REPRODUCED, OR SUBMITTED TO OTHERS WITHOUT WRITTEN AUTHORIZATION. ALL REPRODUCTIONS ARE SUBJECT TO RETURN ON DEMAND.

UNLESS OTHERWISE SPECIFIED

BREAK SHARP EDGES

ALL DIMENSIONS IN INCHES

| | |
|---|---|
| FRACTIONAL | ±.125 |
| TWO PLACE DECIMAL | ±.010 |
| THREE PLACE DECIMAL | ±.005 |
| ANGLES | ±1° |

TITLE: NG300E 4–STAGE COMPRESSOR – PIPING AND INSTRUMENTATION
8SP–HE CYLINDER, 70–100 PRESSURE RANGE

| | | | |
|---|---|---|---|
| CUSTOMER | | PROJECT NO. | |
| SHEET 1/2 | SCALE 1:2 | DRAWING NO. PID–NG300ES4Q–8(100) | REV. – |
| DRAWN BY ADM | DATE 4/3/2012 | | |

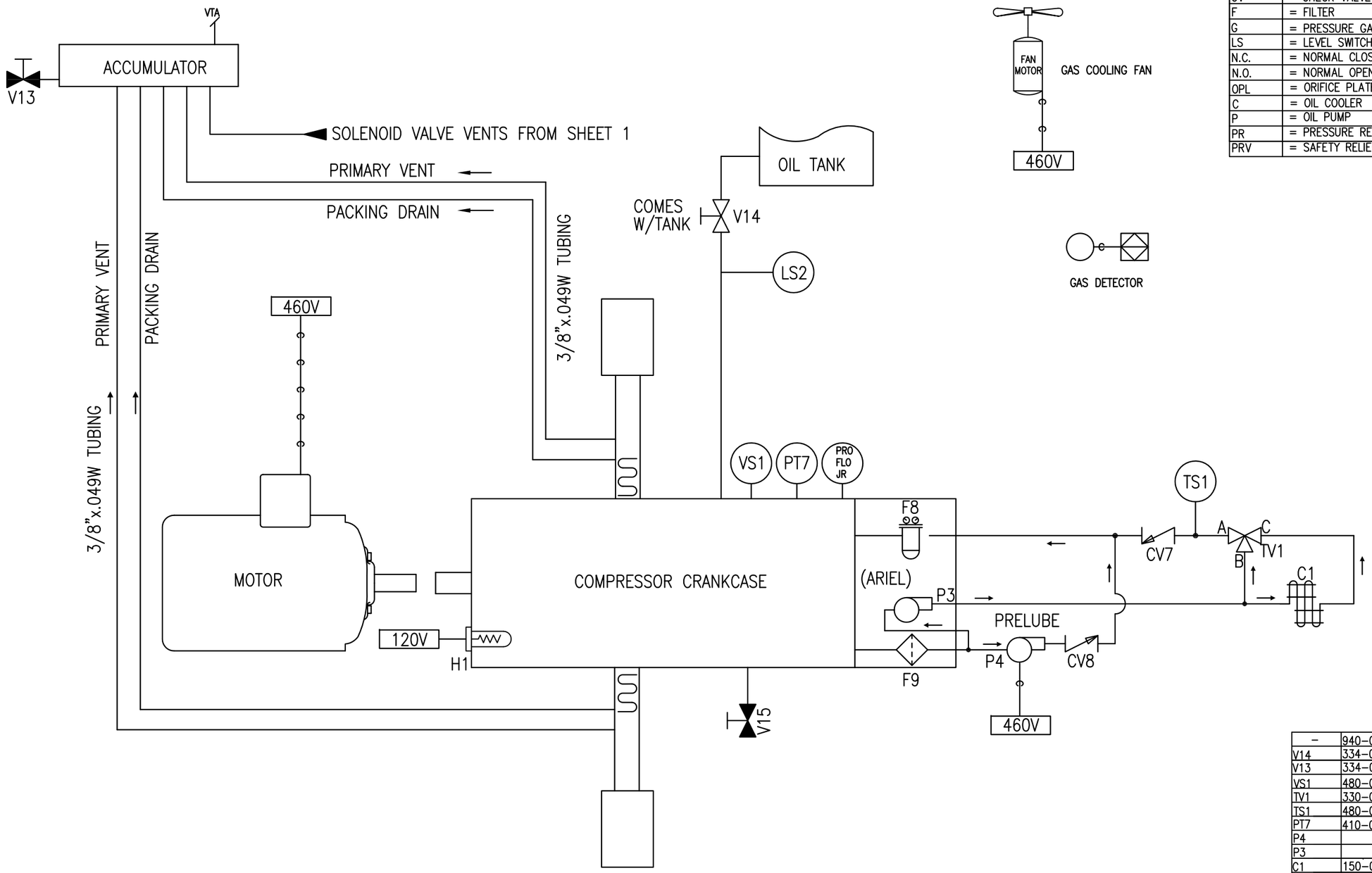


| LEGEND | | | |
|---|---|---|---|
| CV | = CHECK VALVE | PT | = PRESSURE TRANSDUCER |
| F | = FILTER | PV | = PRESSURE VESSEL |
| G | = PRESSURE GAUGE | SV | = SOLENOID VALVE |
| LS | = LEVEL SWITCH | T | = THERMOMETER |
| N.C. | = NORMAL CLOSE | TS | = TEMPERATURE SWITCH |
| N.O. | = NORMAL OPEN | TT | = RESISTIVE TEMPERATURE DEVICE |
| OPL | = ORIFICE PLATE | TV | = THERMOSTATIC VALVE |
| C | = OIL COOLER | V | = MANUAL/ACTUATOR VALVE |
| P | = OIL PUMP | VS | = VIBRATION SWITCH |
| PR | = PRESSURE REGULATOR | VTA | = VENT TO ATMOSPHERE |
| PRV | = SAFETY RELIEF VALVE | | |

| DESIGNATOR | PART NUMBER | TOTAL QTY | DESCRIPTION |
|---|---|---|---|
| – | 940-07237 | 1 | TANK-OIL RESERVOIR 5 GAL 1/2FNPT |
| V14 | 334-07264 | 1 | VALVE-BALL 600# BRZ W/LKG HDL (MV74) |
| V13 | 334-07284 | 1 | VALVE-BALL 1/4 SS 600# W/LKG HDL (MV167) |
| VS1 | 480-07246 | 1 | SWITCH-VIBRATION MURPHY NON-EX (VS2) |
| TV1 | 330-07232 | 1 | VALVE-THERMOSTATIC 1 3-WAY 100°F (TV3) |
| TS1 | 480-07245 | 1 | SWITCH-TEMP 190°F 1/2 MNPT (TS8) |
| PT7 | 410-07278 | 1 | TRANSDUCER-PRESS AST 0-100# IS/UL (PT44) |
| P4 | | 1 | PUMP-PRELUBE 1/2 FNPT TUTHILL |
| P3 | | 1 | PUMP-OIL ARIEL SUPPLIED |
| C1 | 150-07232 | 1 | COOLER-OIL 8000 BTU/HR 1 FNPT (OC2) |
| LS2 | 485-07239 | 1 | SWITCH-OIL MNT LIQUID LEVEL 9.5#MAX (LLS17) |
| F9 | | 1 | Y-STRAINER OIL (ARIEL SUPPLIED) |
| F8 | | 1 | FILTER-OIL (ARIEL SUPPLIED) |
| CV7-CV8 | 336-07231 | 2 | VALVE-CHECK 1/2 FML BRASS 200# (CV24) |

| REV | DATE/BY | DESCRIPTION | REV | DATE/BY | DESCRIPTION |
|---|---|---|---|---|---|
| * | | | | | |

ANGI ENERGY SYSTEMS
15 PLUMB STREET
MILTON, WI 53563
PH: 608-868-4626
FX: 608-868-2723

THIS DRAWING AND ALL INFORMATION THEREIN IS THE SOLE PROPERTY OF ANGI AND SHOULD NOT BE COPIED, REPRODUCED, OR SUBMITTED TO OTHERS WITHOUT WRITTEN AUTHORIZATION. ALL REPRODUCTIONS ARE SUBJECT TO RETURN ON DEMAND.

UNLESS OTHERWISE SPECIFIED
BREAK SHARP EDGES
ALL DIMENSIONS IN INCHES

| | |
|---|---|
| FRACTIONAL | ±.125 |
| TWO PLACE DECIMAL | ±.010 |
| THREE PLACE DECIMAL | ±.005 |
| ANGLES | ±1° |

TITLE: NG300E 4-STAGE COMPRESSOR – PIPING AND INSTRUMENTATION 8SP-HE CYLINDER, 70-100 PRESSURE RANGE

| | | | |
|---|---|---|---|
| CUSTOMER | | PROJECT NO. | |
| SHEET 2/2 | SCALE 1:2 | DRAWING NO. PID-NG300ES4Q-8(100) | REV. – |
| DRAWN BY ADM | DATE 4/3/12 | | |

## SENSING DEVICES

| LOCATION OF DEVICE IN SYSTEM | | | RANGE OF DEVICE | NORMAL OPERATING | SET LOW | SET HIGH | RELIEF VALVE SETTING | START | STOP |
|---|---|---|---|---|---|---|---|---|---|
| AI001 | PT2 | INLET PRESSURE | 0–300 PSI | 50–115 PSI | 49 PSI | 116 PSI | 275 PSI | | |
| AI002 | PT7 | FINAL DISCHARGE PRESSURE | 0–6000 PSI | 4545 PSI | –100 PSI | 4800 PSI | | 3600 PSI | 4100 PSI |
| AI003 | PT8 | COMP OIL PRESSURE | 0–100 PSI | 60 PSI | 35 PSI | 100 PSI | | | |
| AI004 | PT1 | RECEIVER TANK PRESSURE | 0–1000 PSI | 115–382 PSI | –100 PSI | 540 PSI | 600 PSI | | |
| AI005 | PT3 | 1ST STG DISCHARGE PRESSURE | 0–600 PSI | 163–228 PSI | –100 PSI | 396 PSI | 440 PSI | | |
| AI006 | PT4 | 2ND STG DISCHARGE PRESSURE | 0–1000 PSI | 410–536 PSI | –100 PSI | 810 PSI | 900 PSI | | |
| AI007 | PT5 | 3RD STG DISCHARGE PRESSURE | 0–3000 PSI | 1290–1607 PSI | –100 PSI | 2140 PSI | 2400 PSI | | |
| AI008 | PT6 | 4TH STG DISCHARGE PRESSURE | 0–6000 PSI | 4545 PSI | –100 PSI | 4800 PSI | 5200 PSI | | |
| AI009 | | SPARE | N/A | – | – | – | | | |
| AI010 | | RESERVED | N/A | – | – | – | | | |
| AI011 | | RESERVED | N/A | – | – | – | | | |
| AI012 | | LOW BANK PRESSURE | N/A | – | – | – | | | |
| AI013 | | MID BANK PRESSURE | N/A | – | – | – | | | |
| AI014 | | HIGH BANK PRESSURE | N/A | – | – | – | | | |
| AI015 | | RESERVED | N/A | – | – | – | | | |
| AI016 | TT1 | 1ST STAGE RTD TEMPERATURE | 32–392°F | 234–235°F | –40°F | 285°F | | | |
| AI017 | TT2 | 2ND STAGE RTD TEMPERATURE | 32–392°F | 257–269°F | –40°F | 319°F | | | |
| AI018 | TT3 | 3RD STAGE RTD TEMPERATURE | 32–392°F | 276–292°F | –40°F | 342°F | | | |
| AI019 | TT4 | 4TH STAGE RTD TEMPERATURE | 32–392°F | 256–322°F | –40°F | 360°F | | | |
| AI020 | | SPARE | N/A | – | – | – | | | |
| | | 4TH CARD OPTION (MIX902) | N/A | – | – | – | | | |
| AI021 | | SPARE | N/A | – | – | – | | | |
| AI022 | | TIME FILL #1 PRESSURE | N/A | – | – | – | | | |
| AI023 | | SPARE | N/A | – | – | – | | | |
| AI024 | | SPARE | N/A | – | – | – | | | |
| | | | | | | | | | |
| I009 | LS1 | RECEIVER LIQUID LEVEL | – | – | AT SWITCH | – | | | |
| I010 | LS2 | COMPRESSOR OIL LEVEL | N/A | – | SIGHT GLASS | – | | | |
| I011 | | COMPRESSOR OIL NO FLOW SWITCH | (3 MINUTE TIMER) | | > 3 MINUTES | – | | | |
| I012 | TS1 | COMPRESSOR OIL TEMPERATURE | N/A | 110°F | – | 180°F | | | |
| I013 | VS1 | COMPRESSOR VIBRATION SWITCH | N/A | – | – | – | | | |
| I014 | | SPARE | N/A | – | – | – | | | |
| I015 | | SPARE | N/A | – | – | – | | | |
| I016–024 | | RESERVED | N/A | – | – | – | | | |

NOTE:
THESE SETTINGS ARE APPROXIMATE, MAY BE CHANGED OUT IN THE FIELD.

| LEGEND | | | |
|---|---|---|---|
| AI | = ANALOG INPUT | OPL | = ORIFICE PLATE |
| BV | = BLEED VALVE | PR | = PRESSURE REGULATOR |
| CV | = CHECK VALVE | PT | = PRESSURE TRANSDUCER |
| F | = FILTER | PV | = PRESSURE VESSEL |
| G | = PRESSURE GAUGE | RTD | = RESISTIVE TEMPERATURE DEVICE |
| I | = DIGITAL INPUT | SRV | = SAFETY RELIEF VALVE |
| LLG | = LIQUID LEVEL GAUGE | SV | = SOLENOID VALVE |
| LLS | = LEVEL SWITCH | T | = THERMOMETER |
| MLV | = NEEDLE VALVE | TS | = TEMPERATURE SWITCH |
| MV | = MANUAL/ACTUATOR VALVE | TV | = THERMOSTATIC VALVE |
| N.C | = NORMAL CLOSE | VS | = VIBRATION SWITCH |
| N.O | = NORMAL OPEN | VTA | = VENT TO ATMOSPHERE |
| OC | = OIL COOLER | | |

| REV | DATE/BY | DESCRIPTION | REV | DATE/BY | DESCRIPTION |
|---|---|---|---|---|---|
| A | 2/29/12 ADM | ADDED REF DESIGNATOR COLUMN | | | |

ANGI ENERGY SYSTEMS
ANGI ENERGY SYSTEMS
15 PLUMB STREET
MILTON, WI 53563
PH: 608-868-4626
FX: 608-868-2723

THIS DRAWING AND ALL INFORMATION THEREIN IS THE SOLE PROPERTY OF ANGI AND SHOULD NOT BE COPIED, REPRODUCED, OR SUBMITTED TO OTHERS WITHOUT WRITTEN AUTHORIZATION. ALL REPRODUCTIONS ARE SUBJECT TO RETURN ON DEMAND.

UNLESS OTHERWISE SPECIFIED
BREAK SHARP EDGES
ALL DIMENSIONS IN INCHES

| | |
|---|---|
| FRACTIONAL | ±.125 |
| TWO PLACE DECIMAL | ±.010 |
| THREE PLACE DECIMAL | ±.005 |
| ANGLES | ±1° |

| | | | |
|---|---|---|---|
| TITLE | TWO THROW, FOUR STAGE COMPRESSOR SENSING DEVICES AND SETTINGS | | |
| CUSTOMER | PIONEER – BIVENS | PROJECT NO. | 30974 |
| SHEET 1/1 | SCALE 1:2 | DRAWING NO. | REV. |
| DRAWN BY ADM | DATE 5/10/12 | A05–30–30374 | – |

# ANGI ENERGY SYSTEMS

MILTON, WI - USA

## DRAWING INDEX


| PAGE | DESCRIPTION |
|---|---|
| 1 | INDEX AND GENERAL INFORMATION |
| 2 | 110VAC POWER DISTRIBUTION |
| 3 | 24VDC POWER DISTRIBUTION |
| 4 | PLC DIGITAL/ANALOG I/O CARD #1 |
| 5 | PLC DIGITAL/ANALOG I/O CARD #2 |
| 6 | PLC ANALOG CARD#3 |
| 7 | PLC DIGITAL/ANALOG I/O CARD #4 |
| 8 | COMPONENT WIRING DETAILS – PLC POWER & COMMUNICATIONS |
| 9 | LIGHTING/GAS DETECTOR BEACON INTERCONNECT |


NOTE: ALL ELECTRICAL CONNECTION MUST BE COMPLETED OR SUPERVISED BY QUALIFIED PERSONNEL, AND MEET ALL LOCAL AND APPLICABLE CODES. REFER TO NEC FOR MORE INFORMATION.

## FUSE CHART

| FUSE # | ANGI PART NUMBER | AMPS |
|---|---|---|
| FU–1 | 440–07273 | 10 |
| FU–2 | 440–07307 | 3 |
| FU–3 | 440–07307 | 3 |
| FU–4 | 440–07307 | 3 |
| FU–5 | 440–07307 | 3 |
| FU–6 | 440–07307 | 3 |
| FU–7 | 440–07307 | 3 |
| FU–8 | 440–07307 | 3 |
| FU–9 | 440–07273 | 10 |
| FU–10 | 440–07254 | 5 |
| FU–11 | 440–07307 | 3 |
| FU–12 | 440–07307 | 3 |
| FU–13 | 440–07307 | 3 |
| FU–14 | 440–07307 | 3 |
| FU–15 | 440–07307 | 3 |
| FU–16 | 440–07307 | 3 |

NOTE:

ESD CIRCUIT – SELECT SETTINGS FOR (LOCAL OR SITE SUPPLIED ESD POWER)

- SEE PAGE 2, FOR ESD POWER CIRCUIT – WIRE CONNECTION REQUIREMENTS
- ADD OR REMOVE WIRE #'s 103 & 125 AS NECESSARY (JOB SITE SPECIFIC)
- VERIFY CORRECT SETTINGS FOR "ESD" SUPPLY CIRCUIT POWER AT EACH JOB SITE

ANGI ENERGY SYSTEMS
MILTON, WI - USA

793–08003

JOB NUMBER 30974–01
SCHEMATIC A80–10–30974–01
PRIMARY SUPPLY AMPS 10
VOLTS 120VAC PHASE 1 HZ 60
SECONDARY SUPPLY AMPS 10
VOLTS 24VDC PHASE 1 HZ
MOTOR HP N/A FLA N/A
ENCL. TYPE 4
SHORT CIRCUIT CURRENT RATING 5KAIC
HAZARDOUS LOCATION RATING
CLASS I DIV 2 GROUP A,B,C,D
www.angienergy.com

COMPRESSOR#1
CONTROL PANEL

## UL FILE AND PANEL TYPE

| | | |
|---|---|---|
| X | NNNY.E328888 | INDUSTRIAL CONTROL PANELS AND ASSEMBLIES FOR USE IN HAZARDOUS LOCATIONS |
| | NRBX.E334511 | INDUSTRIAL CONTROL PANELS RELATING TO HAZARDOUS LOCATIONS |
| | NITW.E319535 | INDUSTRIAL CONTROL PANELS |
| | | THIRD PARTY CERTIFICATION REQUIRED |
| | NON CERTIFIED | NO CERTIFICATION REQUIRED / AVAILABLE |

**CONTROLLED DRAWING**

THIS DRAWING COMPLIES WITH AGENCY LISTINGS. DO NOT CHANGE WITHOUT APPROVAL FROM ENGINEERING DEPARTMENT.

| REV | DATE/BY | DESCRIPTION | REV | DATE/BY | DESCRIPTION |
|---|---|---|---|---|---|
| | | | | | |
| | | | | | |
| | | | | | |
| * | | | | | |


ANGI ENERGY SYSTEMS
ANGI ENERGY SYSTEMS
15 PLUMB STREET
MILTON, WI 53563
PH: 608–868–4626
FX: 608–868–2723



THIS DRAWING AND ALL INFORMATION THEREIN IS THE SOLE PROPERTY OF ANGI AND SHOULD NOT BE COPIED, REPRODUCED, OR SUBMITTED TO OTHERS WITHOUT WRITTEN AUTHORIZATION. ALL REPRODUCTIONS ARE SUBJECT TO RETURN ON DEMAND.


UNLESS OTHERWISE SPECIFIED
BREAK SHARP EDGES
ALL DIMENSIONS IN INCHES

| | |
|---|---|
| FRACTIONAL | ±.125 |
| TWO PLACE DECIMAL | ±.010 |
| THREE PLACE DECIMAL | ±.005 |
| ANGLES | ±1° |

| | |
|---|---|
| TITLE | RX 371–ELECTRICAL SCHEMATIC/ELECTRIC DRIVE ARIEL FOUR STAGE/COMPRESSOR UNIT CONTROL PANEL |
| CUSTOMER | Pioneer Natural Resources – Bivens |
| PROJECT NO. | 30974–01 |
| SHEET | 1/9 |
| SCALE | 1:1 |
| DRAWING NO. | A80–10–30974–01 |
| REV. | – |
| DRAWN BY | NDA |
| DATE | 1/18/12 |

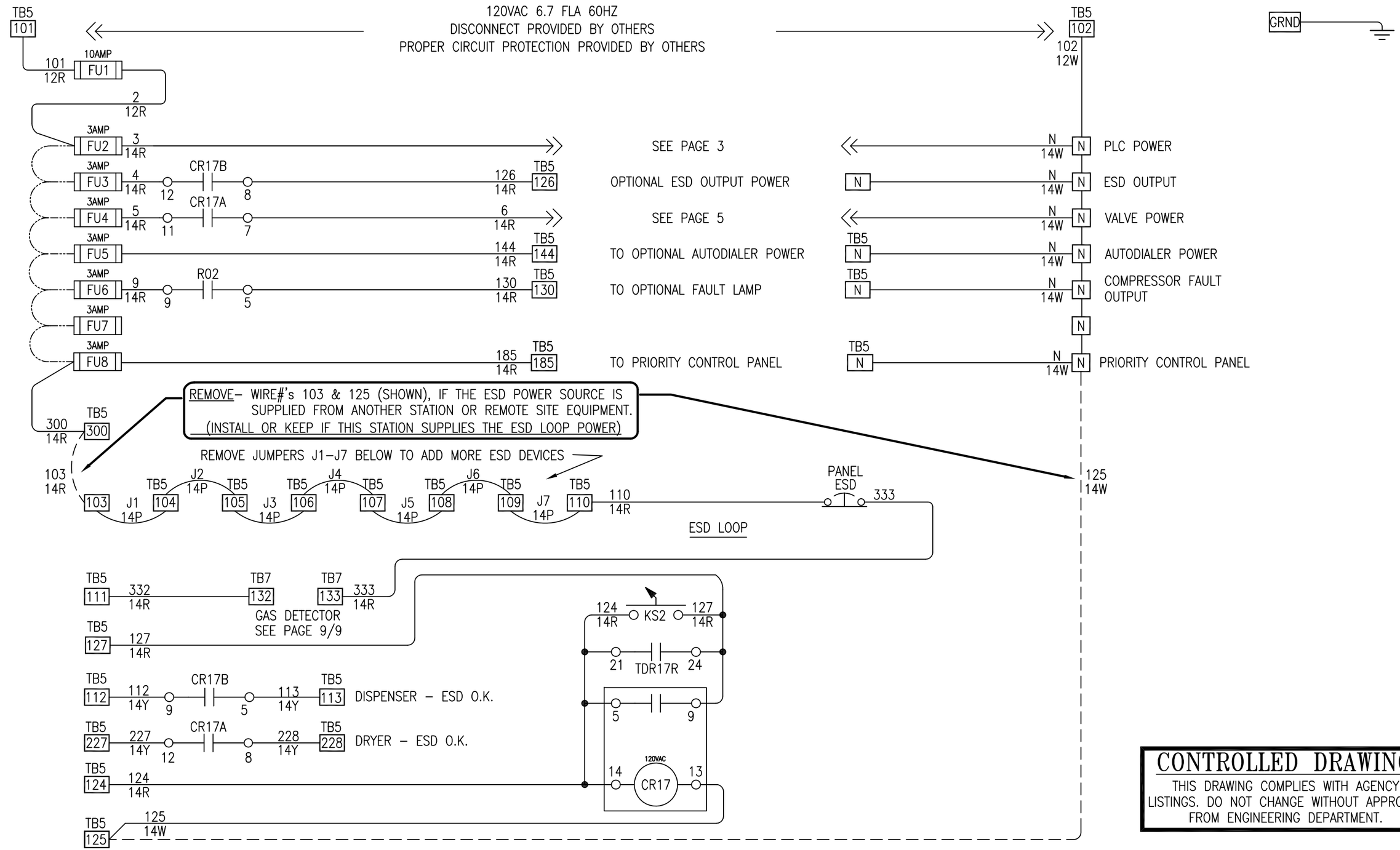


**CONTROLLED DRAWING**

THIS DRAWING COMPLIES WITH AGENCY LISTINGS. DO NOT CHANGE WITHOUT APPROVAL FROM ENGINEERING DEPARTMENT.

| REV | DATE/BY | DESCRIPTION | REV | DATE/BY | DESCRIPTION |
|---|---|---|---|---|---|
| * | | | | | |

ANGI ENERGY SYSTEMS
ANGI ENERGY SYSTEMS
15 PLUMB STREET
MILTON, WI 53563
PH: 608-868-4626
FX: 608-868-2723

THIS DRAWING AND ALL INFORMATION THEREIN IS THE SOLE PROPERTY OF ANGI AND SHOULD NOT BE COPIED, REPRODUCED, OR SUBMITTED TO OTHERS WITHOUT WRITTEN AUTHORIZATION. ALL REPRODUCTIONS ARE SUBJECT TO RETURN ON DEMAND.

UNLESS OTHERWISE SPECIFIED
BREAK SHARP EDGES
ALL DIMENSIONS IN INCHES

| | |
|---|---|
| FRACTIONAL | ±.125 |
| TWO PLACE DECIMAL | ±.010 |
| THREE PLACE DECIMAL | ±.005 |
| ANGLES | ±1° |

| | | | |
|---|---|---|---|
| TITLE | RX 371–ELECTRICAL SCHEMATIC/ELECTRIC DRIVE ARIEL FOUR STAGE/COMPRESSOR UNIT CONTROL PANEL | | |
| CUSTOMER | Pioneer Natural Resources – Bivens | PROJECT NO. | 30974–01 |
| SHEET 2/9 | SCALE 1:1 | DRAWING NO. | REV. |
| DRAWN BY NDA | DATE 1/18/12 | A80–10–30974–01 | – |

**CONTROLLED DRAWING**
THIS DRAWING COMPLIES WITH AGENCY LISTINGS. DO NOT CHANGE WITHOUT APPROVAL FROM ENGINEERING DEPARTMENT.

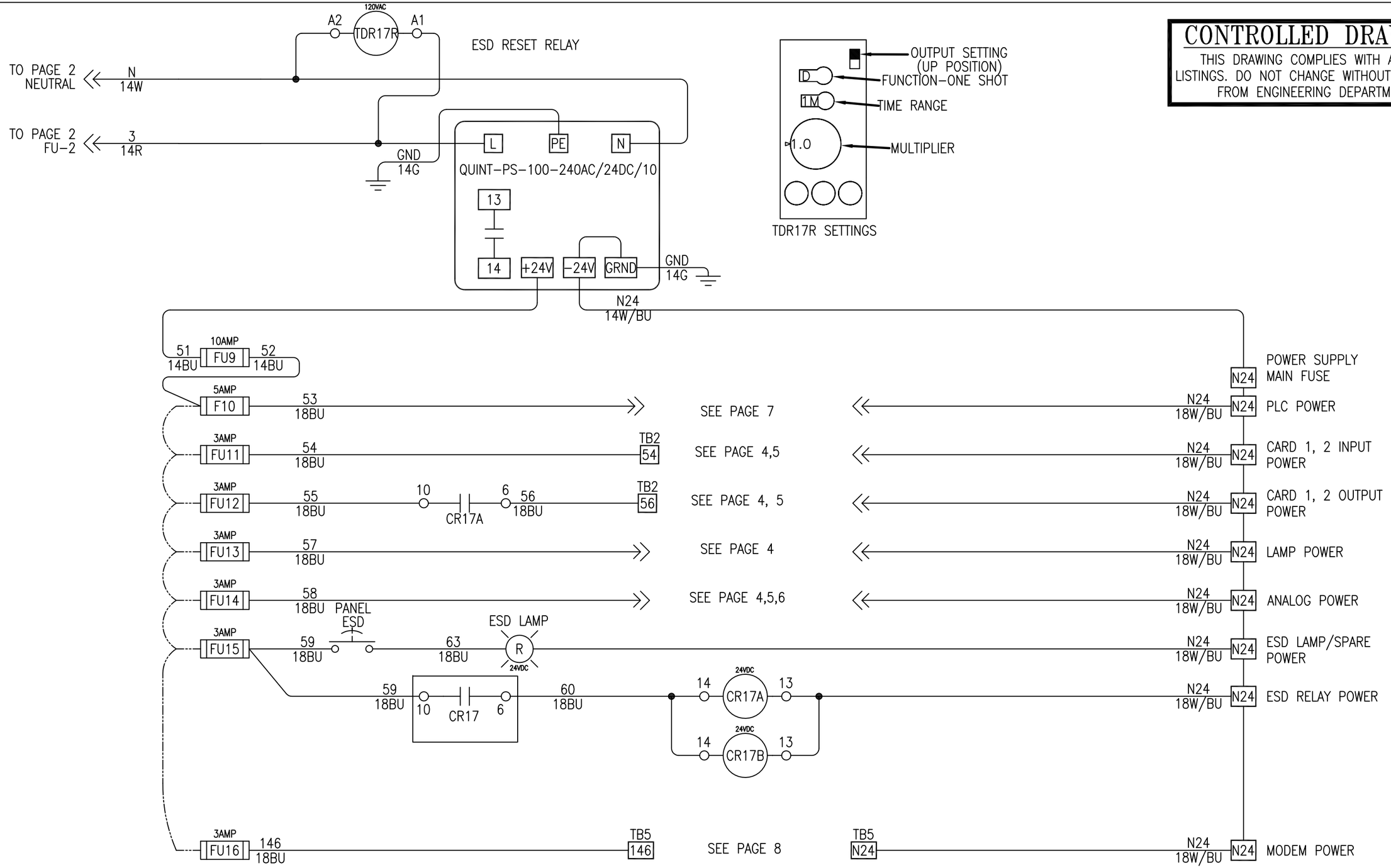


| REV | DATE/BY | DESCRIPTION | REV | DATE/BY | DESCRIPTION |
|---|---|---|---|---|---|
| | | | | | |
| | | | | | |
| | | | | | |
| | | | | | |


ANGI ENERGY SYSTEMS
ANGI ENERGY SYSTEMS
15 PLUMB STREET
MILTON, WI 53563
PH: 608-868-4626
FX: 608-868-2723



THIS DRAWING AND ALL INFORMATION THEREIN IS THE SOLE PROPERTY OF ANGI AND SHOULD NOT BE COPIED, REPRODUCED, OR SUBMITTED TO OTHERS WITHOUT WRITTEN AUTHORIZATION. ALL REPRODUCTIONS ARE SUBJECT TO RETURN ON DEMAND.


UNLESS OTHERWISE SPECIFIED
BREAK SHARP EDGES
ALL DIMENSIONS IN INCHES

| | |
|---|---|
| FRACTIONAL | ±.125 |
| TWO PLACE DECIMAL | ±.010 |
| THREE PLACE DECIMAL | ±.005 |
| ANGLES | ±1° |

| | | | |
|---|---|---|---|
| TITLE | RX 371-ELECTRICAL SCHEMATIC/ELECTRIC DRIVE ARIEL FOUR STAGE/COMPRESSOR UNIT CONTROL PANEL | | |
| CUSTOMER | Pioneer Natural Resources – Bivens | PROJECT NO. | 30974-01 |
| SHEET 3/9 | SCALE 1:1 | DRAWING NO. | REV. |
| DRAWN BY NDA | DATE 1/18/12 | A80-10-30974-01 | – |

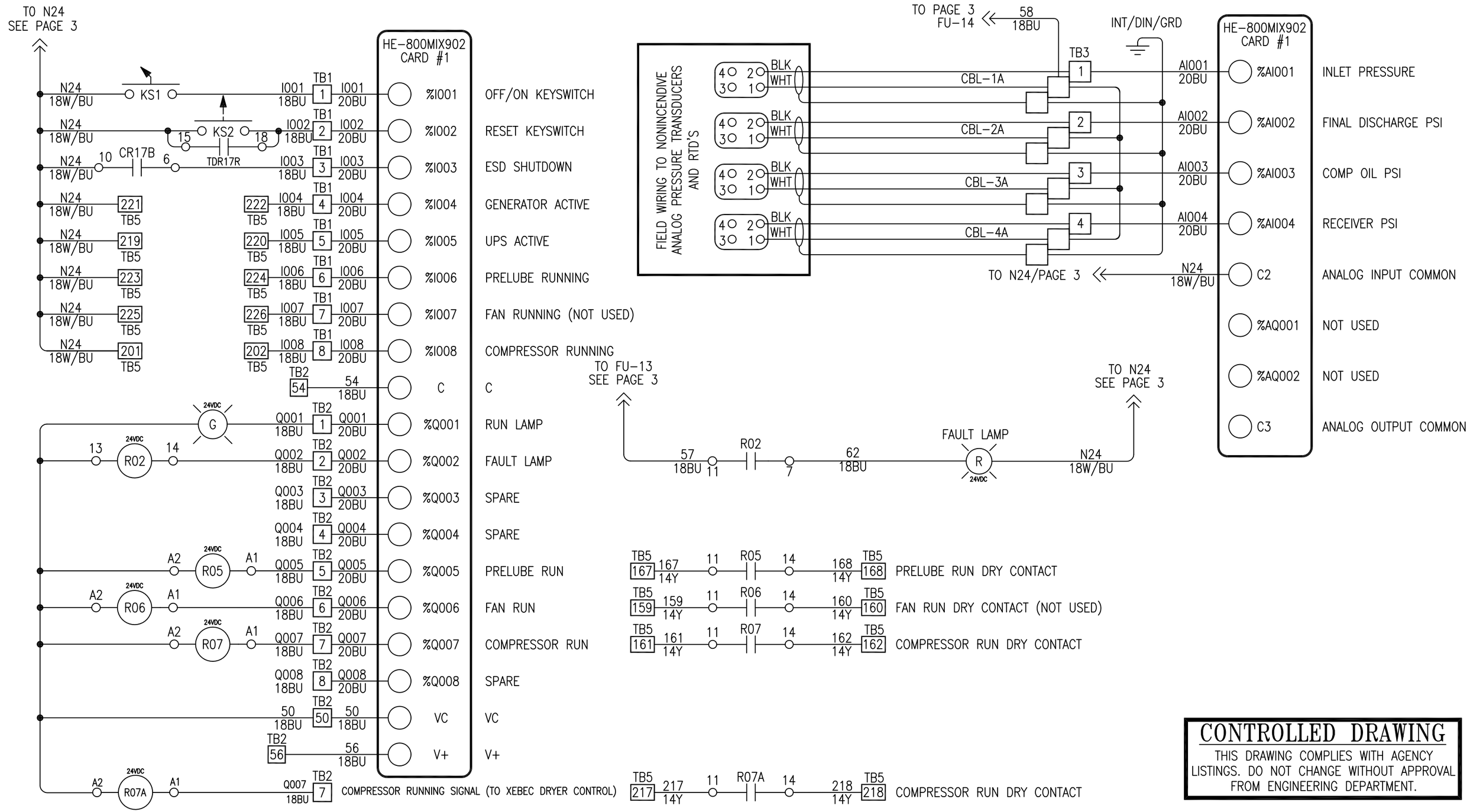


**CONTROLLED DRAWING**

THIS DRAWING COMPLIES WITH AGENCY LISTINGS. DO NOT CHANGE WITHOUT APPROVAL FROM ENGINEERING DEPARTMENT.

| REV | DATE/BY | DESCRIPTION | REV | DATE/BY | DESCRIPTION |
|---|---|---|---|---|---|
| * | | | | | |

ANGI ENERGY SYSTEMS
15 PLUMB STREET
MILTON, WI 53563
PH: 608-868-4626
FX: 608-868-2723

THIS DRAWING AND ALL INFORMATION THEREIN IS THE SOLE PROPERTY OF ANGI AND SHOULD NOT BE COPIED, REPRODUCED, OR SUBMITTED TO OTHERS WITHOUT WRITTEN AUTHORIZATION. ALL REPRODUCTIONS ARE SUBJECT TO RETURN ON DEMAND.

UNLESS OTHERWISE SPECIFIED
BREAK SHARP EDGES
ALL DIMENSIONS IN INCHES

| | |
|---|---|
| FRACTIONAL | ±.125 |
| TWO PLACE DECIMAL | ±.010 |
| THREE PLACE DECIMAL | ±.005 |
| ANGLES | ±1° |

TITLE: RX 371-ELECTRICAL SCHEMATIC/ELECTRIC DRIVE
ARIEL FOUR STAGE/COMPRESSOR UNIT CONTROL PANEL

| | | | |
|---|---|---|---|
| CUSTOMER: Pioneer Natural Resources – Bivens | | PROJECT NO. 30974-01 | |
| SHEET 4/9 | SCALE 1:1 | DRAWING NO. A80-10-30974-01 | REV. – |
| DRAWN BY NDA | DATE 1/18/12 | | |

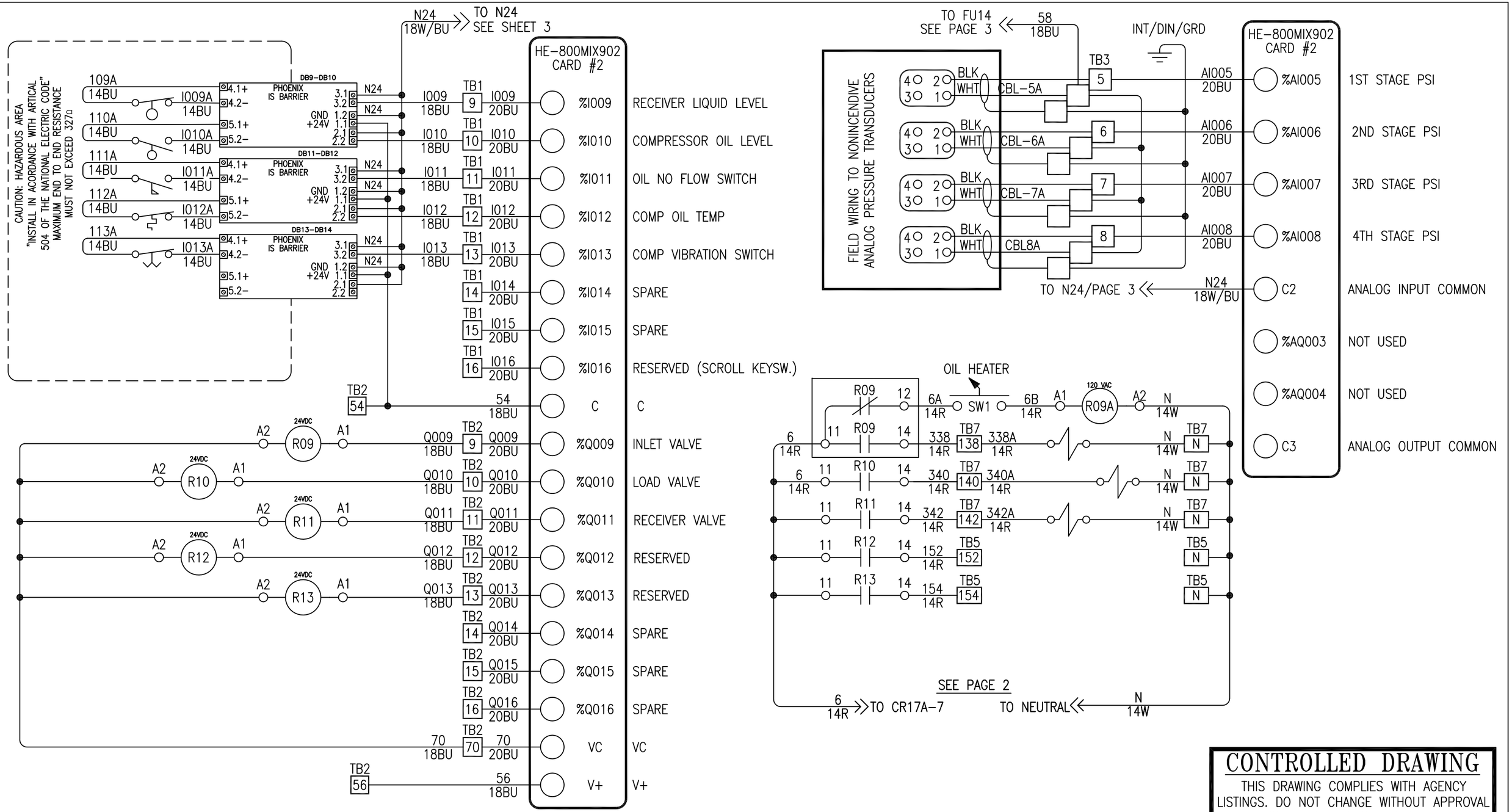


## CONTROLLED DRAWING

THIS DRAWING COMPLIES WITH AGENCY LISTINGS. DO NOT CHANGE WITHOUT APPROVAL FROM ENGINEERING DEPARTMENT.

| REV | DATE/BY | DESCRIPTION | REV | DATE/BY | DESCRIPTION |
|---|---|---|---|---|---|
| * | | | | | |

ANGI ENERGY SYSTEMS
15 PLUMB STREET
MILTON, WI 53563
PH: 608-868-4626
FX: 608-868-2723

THIS DRAWING AND ALL INFORMATION THEREIN IS THE SOLE PROPERTY OF ANGI AND SHOULD NOT BE COPIED, REPRODUCED, OR SUBMITTED TO OTHERS WITHOUT WRITTEN AUTHORIZATION. ALL REPRODUCTIONS ARE SUBJECT TO RETURN ON DEMAND.

UNLESS OTHERWISE SPECIFIED
BREAK SHARP EDGES
ALL DIMENSIONS IN INCHES

| | |
|---|---|
| FRACTIONAL | ±.125 |
| TWO PLACE DECIMAL | ±.010 |
| THREE PLACE DECIMAL | ±.005 |
| ANGLES | ±1° |

| | | | |
|---|---|---|---|
| TITLE | RX 371-ELECTRICAL SCHEMATIC/ELECTRIC DRIVE ARIEL FOUR STAGE/COMPRESSOR UNIT CONTROL PANEL | | |
| CUSTOMER | Pioneer Natural Resources - Bivens | PROJECT NO. | 30974-01 |
| SHEET 5/9 | SCALE 1:1 | DRAWING NO. | REV. |
| DRAWN BY NDA | DATE 1/18/12 | A80-10-30974-01 | - |

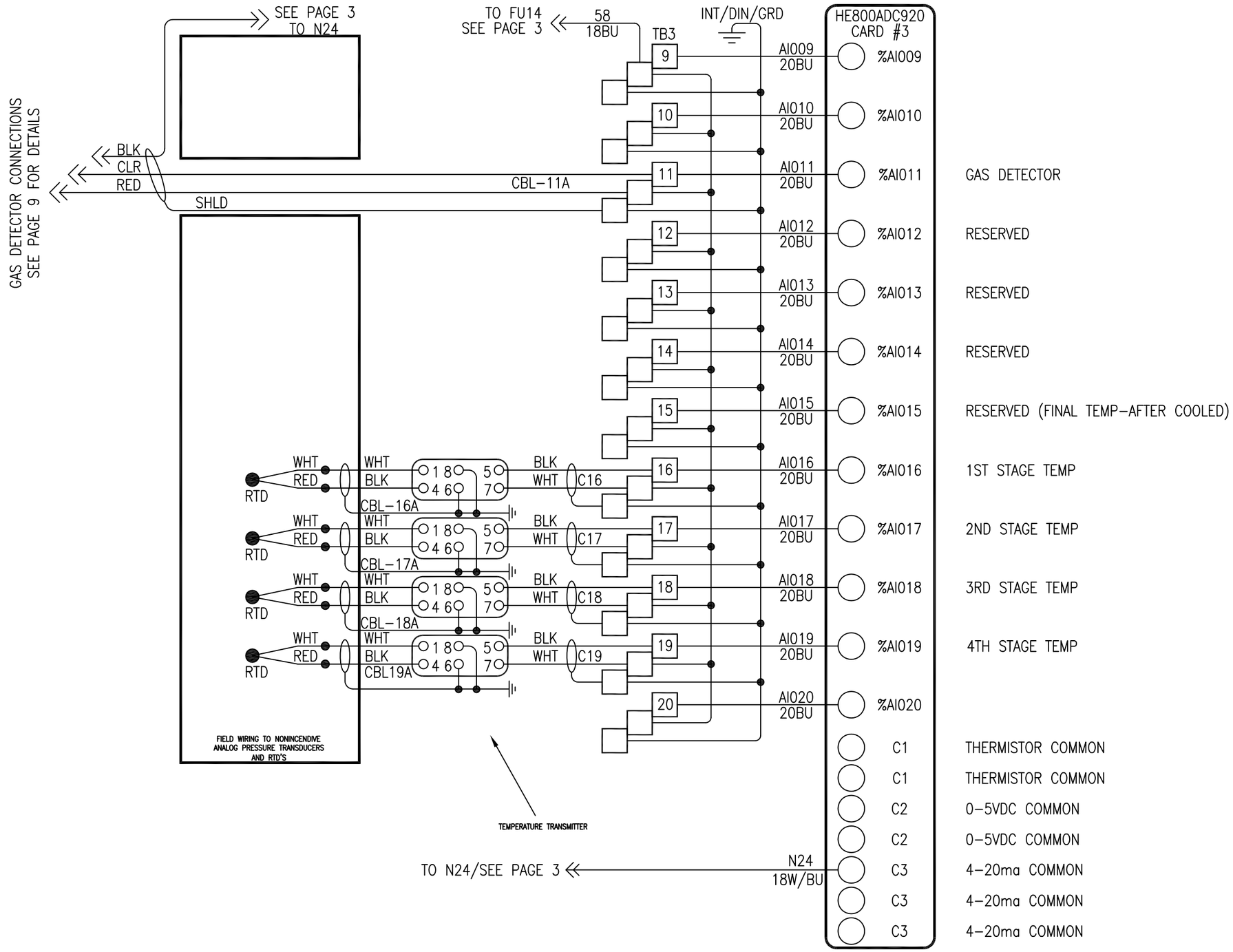


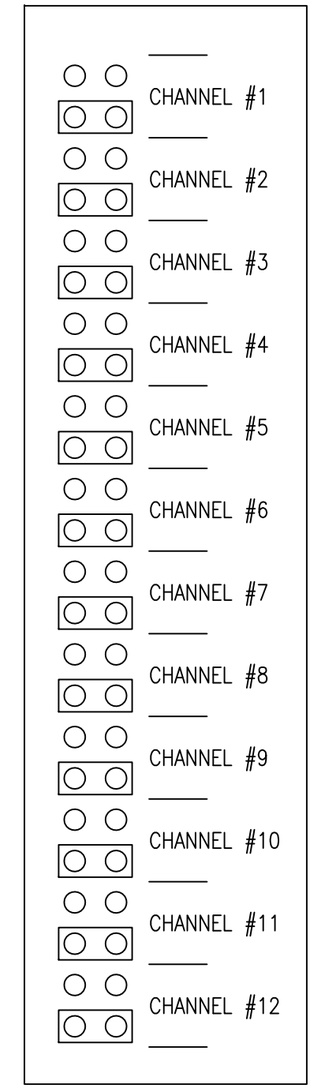


INPUT JUMPER CONFIGURATION

**CONTROLLED DRAWING**

THIS DRAWING COMPLIES WITH AGENCY LISTINGS. DO NOT CHANGE WITHOUT APPROVAL FROM ENGINEERING DEPARTMENT.

| REV | DATE/BY | DESCRIPTION | REV | DATE/BY | DESCRIPTION |
|---|---|---|---|---|---|
| * | | | | | |

ANGI ENERGY SYSTEMS
15 PLUMB STREET
MILTON, WI 53563
PH: 608-868-4626
FX: 608-868-2723

THIS DRAWING AND ALL INFORMATION THEREIN IS THE SOLE PROPERTY OF ANGI AND SHOULD NOT BE COPIED, REPRODUCED, OR SUBMITTED TO OTHERS WITHOUT WRITTEN AUTHORIZATION. ALL REPRODUCTIONS ARE SUBJECT TO RETURN ON DEMAND.

UNLESS OTHERWISE SPECIFIED
BREAK SHARP EDGES
ALL DIMENSIONS IN INCHES

| | |
|---|---|
| FRACTIONAL | ±.125 |
| TWO PLACE DECIMAL | ±.010 |
| THREE PLACE DECIMAL | ±.005 |
| ANGLES | ±1° |

| | | | |
|---|---|---|---|
| TITLE | RX 371-ELECTRICAL SCHEMATIC/ELECTRIC DRIVE ARIEL FOUR STAGE/COMPRESSOR UNIT CONTROL PANEL | | |
| CUSTOMER | Pioneer Natural Resources - Bivens | PROJECT NO. | 30974-01 |
| SHEET 6/9 | SCALE 1:1 | DRAWING NO. | REV. |
| DRAWN BY NDA | DATE 1/18/12 | A80-10-30974-01 | - |

RESERVED FOR 4TH CARD

**CONTROLLED DRAWING**

THIS DRAWING COMPLIES WITH AGENCY LISTINGS. DO NOT CHANGE WITHOUT APPROVAL FROM ENGINEERING DEPARTMENT.

| REV | DATE/BY | DESCRIPTION | REV | DATE/BY | DESCRIPTION |
|---|---|---|---|---|---|
| | | | | | |
| | | | | | |
| | | | | | |
| | | | | | |

ANGI ENERGY SYSTEMS
15 PLUMB STREET
MILTON, WI 53563
PH: 608-868-4626
FX: 608-868-2723

THIS DRAWING AND ALL INFORMATION THEREIN IS THE SOLE PROPERTY OF ANGI AND SHOULD NOT BE COPIED, REPRODUCED, OR SUBMITTED TO OTHERS WITHOUT WRITTEN AUTHORIZATION. ALL REPRODUCTIONS ARE SUBJECT TO RETURN ON DEMAND.

UNLESS OTHERWISE SPECIFIED

BREAK SHARP EDGES

ALL DIMENSIONS IN INCHES

| | |
|---|---|
| FRACTIONAL | ±.125 |
| TWO PLACE DECIMAL | ±.010 |
| THREE PLACE DECIMAL | ±.005 |
| ANGLES | ±1° |

| | | | |
|---|---|---|---|
| TITLE | RX 371–ELECTRICAL SCHEMATIC/ELECTRIC DRIVE ARIEL FOUR STAGE/COMPRESSOR UNIT CONTROL PANEL | | |
| CUSTOMER | Pioneer Natural Resources – Bivens | PROJECT NO. | 30974–01 |
| SHEET 7/9 | SCALE 1:1 | DRAWING NO. | REV. |
| DRAWN BY NDA | DATE 1/18/12 | A80–10–30974–01 | – |

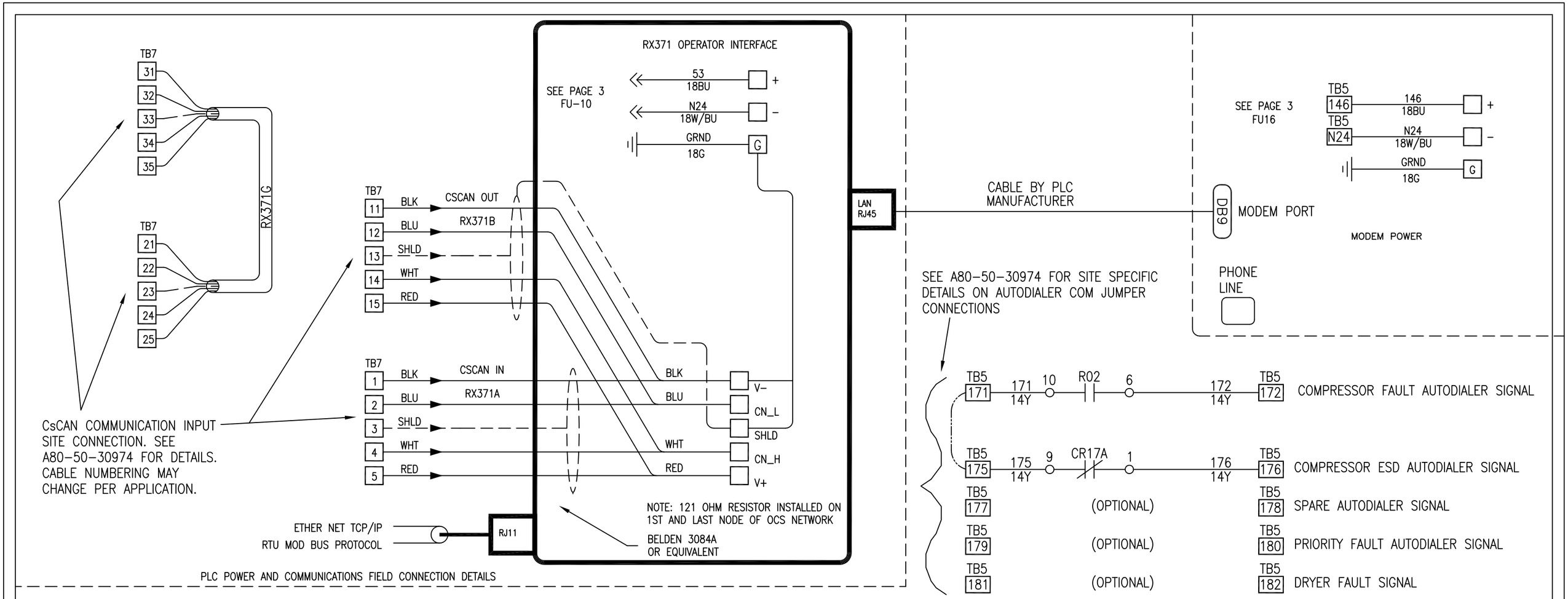


SEE R09A PAGE 5/9 TB5 128 128 14Y 11 R09A 14 129 14Y TB5 129 OIL HEATER-RUN SIGNAL

**CONTROLLED DRAWING**

THIS DRAWING COMPLIES WITH AGENCY LISTINGS. DO NOT CHANGE WITHOUT APPROVAL FROM ENGINEERING DEPARTMENT.

| REV | DATE/BY | DESCRIPTION | REV | DATE/BY | DESCRIPTION |
|---|---|---|---|---|---|
| * | | | | | |

ANGI ENERGY SYSTEMS
15 PLUMB STREET
MILTON, WI 53563
PH: 608-868-4626
FX: 608-868-2723

THIS DRAWING AND ALL INFORMATION THEREIN IS THE SOLE PROPERTY OF ANGI AND SHOULD NOT BE COPIED, REPRODUCED, OR SUBMITTED TO OTHERS WITHOUT WRITTEN AUTHORIZATION. ALL REPRODUCTIONS ARE SUBJECT TO RETURN ON DEMAND.

UNLESS OTHERWISE SPECIFIED
BREAK SHARP EDGES
ALL DIMENSIONS IN INCHES

| | |
|---|---|
| FRACTIONAL | ±.125 |
| TWO PLACE DECIMAL | ±.010 |
| THREE PLACE DECIMAL | ±.005 |
| ANGLES | ±1° |

| | | | |
|---|---|---|---|
| TITLE | RX 371-ELECTRICAL SCHEMATIC/ELECTRIC DRIVE ARIEL FOUR STAGE/COMPRESSOR UNIT CONTROL PANEL | | |
| CUSTOMER | Pioneer Natural Resources - Bivens | PROJECT NO. | 30974-01 |
| SHEET 8/9 | SCALE 1:1 | DRAWING NO. | REV. |
| DRAWN BY NDA | DATE 1/18/12 | A80-10-30974-01 | - |

SCOTT FREEDOM 6000-IR
GAS DETECTOR WIRING

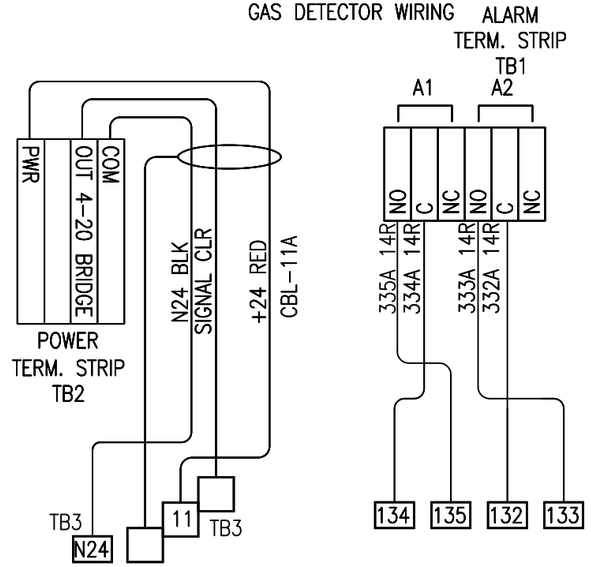


ANALOG TERMINALS
SEE PAGE 6

GAS DETECTOR TERMINALS TB7
SEE PAGE 2

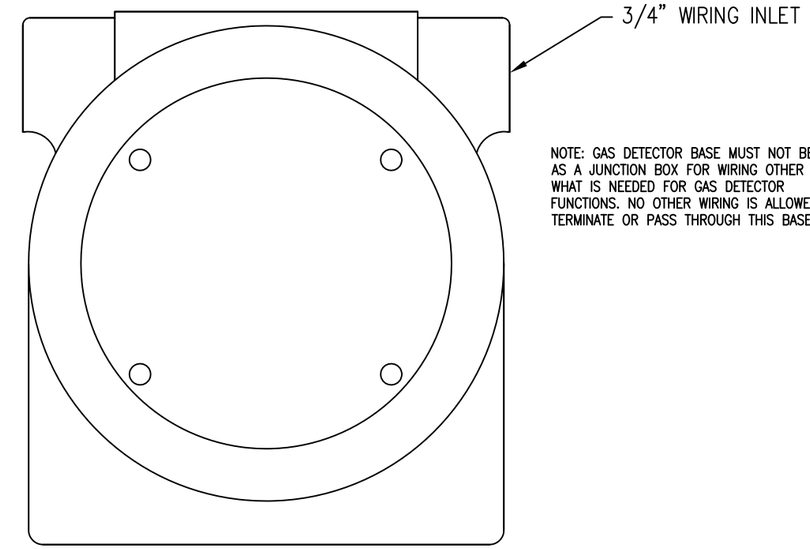


NOTE: GAS DETECTOR BASE MUST NOT BE USED AS A JUNCTION BOX FOR WIRING OTHER THAN WHAT IS NEEDED FOR GAS DETECTOR FUNCTIONS. NO OTHER WIRING IS ALLOWED TO TERMINATE OR PASS THROUGH THIS BASE.

GAS DETECTOR CIRCUIT

SCOTT FREEDOM – GAS DETECTOR
SCOTT INSTRUMENTS– MODEL 6000-IR

GAS DETECTOR WIRING DETAILS
(OPTIONAL)

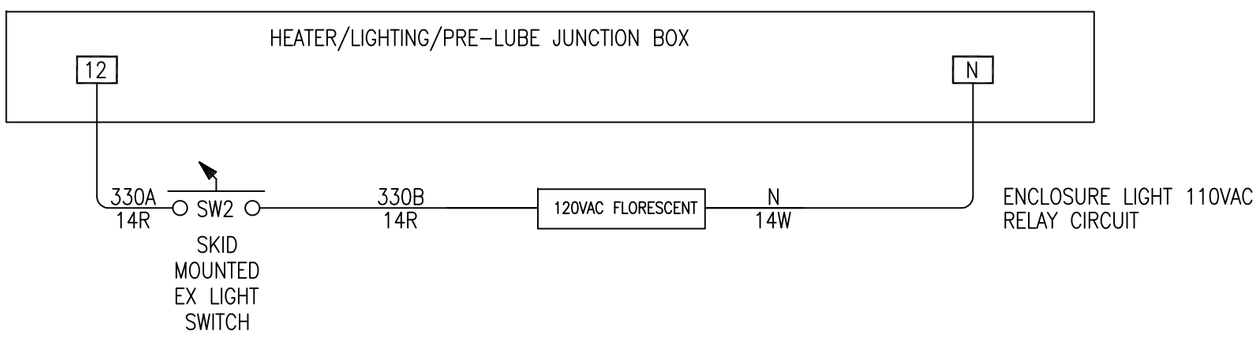


**CONTROLLED DRAWING**

THIS DRAWING COMPLIES WITH AGENCY LISTINGS. DO NOT CHANGE WITHOUT APPROVAL FROM ENGINEERING DEPARTMENT.

| REV | DATE/BY | DESCRIPTION | REV | DATE/BY | DESCRIPTION |
|---|---|---|---|---|---|
| | | | | | |
| | | | | | |
| | | | | | |
| * | | | | | |


ANGI ENERGY SYSTEMS
ANGI ENERGY SYSTEMS
15 PLUMB STREET
MILTON, WI 53563
PH: 608-868-4626
FX: 608-868-2723



THIS DRAWING AND ALL INFORMATION THEREIN IS THE SOLE PROPERTY OF ANGI AND SHOULD NOT BE COPIED, REPRODUCED, OR SUBMITTED TO OTHERS WITHOUT WRITTEN AUTHORIZATION. ALL REPRODUCTIONS ARE SUBJECT TO RETURN ON DEMAND.


UNLESS OTHERWISE SPECIFIED
BREAK SHARP EDGES
ALL DIMENSIONS IN INCHES

| | |
|---|---|
| FRACTIONAL | ±.125 |
| TWO PLACE DECIMAL | ±.010 |
| THREE PLACE DECIMAL | ±.005 |
| ANGLES | ±1° |

| | | | |
|---|---|---|---|
| TITLE | RX 371–ELECTRICAL SCHEMATIC/ELECTRIC DRIVE ARIEL FOUR STAGE/COMPRESSOR UNIT CONTROL PANEL | | |
| CUSTOMER | Pioneer Natural Resources – Bivens | PROJECT NO. | 30974–01 |
| SHEET 9/9 | SCALE 1:1 | DRAWING NO. | REV. |
| DRAWN BY NDA | DATE 1/18/12 | A80–10–30974–01 | – |

| WIRE# | SIZE | COLOR TYPE | START | | WIRE PATH | | | | | | | END | | DETAILS |
|---|---|---|---|---|---|---|---|---|---|---|---|---|---|---|
| 2x1T-1 | 4/0 | AWG | P5 | SS1-A | C109A | | | | | | | M1 | | |
| 2x1T-2 | 4/0 | AWG | P5 | SS1-A | C109A | | | | | | | M1 | | |
| 2x1T-3 | 4/0 | AWG | P5 | SS1-A | C109A | | | | | | | M1 | | |
| GROUND | 2 | AWG | P5 | GROUND | C109A | | | | | | | M1 | | |
| | | | | | | | | | | | | | | |
| 3T-1 | 12 | AWG | P5 | MMS1-A | C107A | | | | | | | J1 | 1 | |
| 3T-2 | 12 | AWG | P5 | MMS1-A | C107A | | | | | | | J1 | 2 | |
| 3T-3 | 12 | AWG | P5 | MMS1-A | C107A | | | | | | | J1 | 3 | |
| GND | 12 | AWG | P5 | GROUND | C107A | | | | | | | J1 | GROUND | |
| 2T-1 | 10 | AWG | P5 | MMS2-A | C107A | | | | | | | J1 | 4 | |
| 2T-2 | 10 | AWG | P5 | MMS2-A | C107A | | | | | | | J1 | 5 | |
| 2T-3 | 10 | AWG | P5 | MMS2-A | C107A | | | | | | | J1 | 6 | |
| | | | | | | | | | | | | | | |
| GND | 12 | AWG | P5 | GROUND | C108A | | | | | | | J1 | GROUND | |
| 10A | 12 | AWG | P5 | H4 | C108A | | | | | | | J1 | 10 | |
| N | 12 | AWG | P5 | N4 | C108A | | | | | | | J1 | N | |
| 12A | 12 | AWG | P5 | H3 | C108A | | | | | | | J1 | 12 | |
| N | 12 | AWG | P5 | N3 | C108A | | | | | | | J1 | N | |
| | | | | | | | | | | | | | | |
| 101A | 12 | AWG | P5 | H1 | C104A | | | | | | | P1 | TB5-101 | |
| 102A | 12 | AWG | P5 | N1 | C104A | | | | | | | P1 | TB5-102 | |
| GNDA | 12 | AWG | P5 | GROUND | C104A | | | | | | | P1 | GROUND | |
| 112A | 14 | AWG | P5 | 112A | C104A | | | | | | | P1 | TB5-112 | |
| 113A | 14 | AWG | P5 | 113A | C104A | | | | | | | P1 | TB5-113 | |
| 128A | 14 | AWG | P5 | 128A | C104A | | | | | | | P1 | TB5-128 | |
| 129A | 14 | AWG | P5 | 129A | C104A | | | | | | | P1 | TB5-129 | |
| 159A | 14 | AWG | P5 | 159A | C104A | | | | | | | P1 | TB5-159 | |
| 160A | 14 | AWG | P5 | 160A | C104A | | | | | | | P1 | TB5-160 | |
| 161A | 14 | AWG | P5 | 161A | C104A | | | | | | | P1 | TB5-161 | |
| 162A | 14 | AWG | P5 | 162A | C104A | | | | | | | P1 | TB5-162 | |
| 167A | 14 | AWG | P5 | 167A | C104A | | | | | | | P1 | TB5-167 | |
| 168A | 14 | AWG | P5 | 168A | C104A | | | | | | | P1 | TB5-168 | |
| 201A | 14 | AWG | P5 | 201A | C104A | | | | | | | P1 | TB5-201 | |
| 202A | 14 | AWG | P5 | 202A | C104A | | | | | | | P1 | TB5-202 | |
| 223A | 14 | AWG | P5 | 223A | C104A | | | | | | | P1 | TB5-223 | |
| 224A | 14 | AWG | P5 | 224A | C104A | | | | | | | P1 | TB5-224 | |
| 225A | 14 | AWG | P5 | 225A | C104A | | | | | | | P1 | TB5-225 | |
| 226A | 14 | AWG | P5 | 226A | C104A | | | | | | | P1 | TB5-226 | |
| 227A | 14 | AWG | P5 | 210 | C104A | | | | | | | P1 | TB5-227 | |
| 228A | 14 | AWG | P5 | 211 | C104A | | | | | | | P1 | TB5-228 | |
| 105A | 14 | AWG | P1 | TB5-105 | C101A | | | | | | | ESD1 | BUTTON | |
| 106A | 14 | AWG | P1 | TB5-106 | C101A | | | | | | | ESD1 | BUTTON | |
| 107A | 14 | AWG | P1 | TB5-107 | C101A | C101B | | | | | | ESD2 | BUTTON | |
| 107B | 14 | AWG | P1 | ESD2 | C101C | | | | | | | ESD3 | BUTTON | |
| 108A | 14 | AWG | P1 | TB5-108 | C101A | C101B | C101C | | | | | ESD3 | BUTTON | |
| | | | | | | | | | | | | | | |
| 8T-1 | 12 | AWG | P5 | H8 | C110A | JB1 | | | | | C110A-1 | D1 | TS2-1 | |
| N | 12 | AWG | P5 | N8 | C110A | JB1 | | | | | C110A-1 | D1 | TS2-2 | |
| GND | 12 | AWG | P5 | GROUND | C110A | JB1 | | | | | C110A-1 | D1 | TS2-3 | |
| 9T-1 | 12 | AWG | P5 | H9 | C110A | JB1 | | | | | C110A-2 | D2 | TS2-1 | |
| N | 12 | AWG | P5 | N9 | C110A | JB1 | | | | | C110A-2 | D2 | TS2-2 | |
| GND | 12 | AWG | P5 | GROUND | C110A | JB1 | | | | | C110A-2 | D2 | TS2-3 | |

| WIRE# | SIZE | COLOR TYPE | START | | WIRE PATH | | | | | | END | | DETAILS |
|---|---|---|---|---|---|---|---|---|---|---|---|---|---|
| | | | | | | | | | | | | | |
| 11T-1 | 12 | AWG | P5 | H11 | | | | | | C114A | F1 | BLK | |
| N | 12 | AWG | P5 | N11 | | | | | | C114A | F1 | WHT | |
| GND | 12 | AWG | P5 | GROUND | | | | | | C114A | F1 | GRN | |
| | | | | | | | | | | | | | |
| | | | | | | | | | | | | | |
| | | | | | | | | | | | | | |
| | | | | | | | | | | | | | |
| 4T-1 | 14 | AWG | P5 | H3 | | | | | | C111A | P6 | TB5-101 | |
| N | 14 | AWG | P5 | N3 | | | | | | C111A | P6 | TB5-102 | |
| GND | 14 | AWG | P5 | GROUND | | | | | | C111A | P6 | GROUND | |
| | | | | | | | | | | | | | |
| 109A | 14 | AWG | P1 | TB5-109 | | | | | | C102A | P6 | TB5-101 | |
| 110A | 14 | AWG | P1 | TB5-110 | | | | | | C102A | P6 | TB5-102 | |
| 124B | 14 | AWG | P1 | TB5-124 | | | | | | C102A | P6 | TB5-124 | |
| 125B | 14 | AWG | P1 | TB5-125 | | | | | | C102A | P6 | TB5-125 | |
| | | | | | | | | | | | | | |
| 1A | 14 | AWG | F1 | TB1-2 | | | | | | C401A | D1 | TS3-1 | |
| 3A | 14 | AWG | F1 | TB1-5 | | | | | | C401A | D1 | TS3-3 | |
| 5A | 14 | AWG | F1 | TB1-3 | | | | | | C401A | D1 | TS3-5 | |
| 7A | 14 | AWG | F1 | TB1-6 | | | | | | C401A | D1 | TS3-7 | |
| | | | | | | | | | | | | | |
| 1B | 14 | AWG | F1 | TB1-2 | | | | | | C401B | D2 | TS3-1 | |
| 3B | 14 | AWG | F1 | TB1-5 | | | | | | C401B | D2 | TS3-3 | |
| 5B | 14 | AWG | F1 | TB1-3 | | | | | | C401B | D2 | TS3-5 | |
| 7B | 14 | AWG | F1 | TB1-6 | | | | | | C401B | D2 | TS3-7 | |
| | | | | | | | | | | | | | |
| 7T-1 | 10 | AWG | P5 | MS3 | C112A | | | | | | P3 | L1 | |
| 7T-2 | 10 | AWG | P5 | MS3 | C112A | | | | | | P3 | L2 | |
| 7T-3 | 10 | AWG | P5 | MS3 | C112A | | | | | | P3 | L3 | |
| GND | 10 | AWG | P5 | GROUND | C112A | | | | | | P3 | GND | |
| | | | | | | | | | | | | | |
| CBL1 | 20 | 2-WIRE | D1 | TB2-14/15 | | | | | | C402A | F1 | J4 | +12/P1/OV HOSE 1 |
| CBL2 | 20 | 2-WIRE | D1 | TB2-17/18 | | | | | | C402A | F1 | J4 | +12/P1/OV HOSE 2 |
| | | | | | | | | | | | | | |
| CBL3 | 20 | 2-WIRE | D2 | TB2-14/15 | | | | | | C402B | F1 | J6 | +12/P1/OV HOSE 3 |
| CBL4 | 20 | 2-WIRE | D2 | TB2-17/18 | | | | | | C402B | F1 | J6 | +12/P1/OV HOSE 4 |
| | | | | | | | | | | | | | |
| | | | | | | | | | | | | | |
| 181B | #14 | AWG | P1 | TB5-181 | C103A | | | | | | P3 | 50 | |
| 182B | #14 | AWG | P1 | TB5-182 | C103A | | | | | | P3 | 51 | |
| | | | | | | | | | | | | | |
| | | | | | | | | | | | | | |
| RX371AE | CBL | 5-20GA | P1 | TB7-31 | C106A | | | | | | P6 | TB6-1 | |
| 179B | 14 | AWG | P1 | TB5-179 | C106A | | | | | | P6 | TB5-163 | |
| 180B | 14 | AWG | P1 | TB5-180 | C106A | | | | | | P6 | TB5-164 | |
| | | | | | | | | | | | | | |
| PH1 | NA | PHONE | NA | UTILITY | C105A | | | | | | P1 | MODEM | |

NOTE: 10% SPARES MUST BE INCLUDED AND CLEARLY LABELED IN CONDUIT RUNS WHENEVER POSSIBLE.

| REV | DATE/BY | DESCRIPTION | REV | DATE/BY | DESCRIPTION |
|---|---|---|---|---|---|
| B | 9/7/12 PJH | ADD DRYER | | | |

ANGI ENERGY SYSTEMS
ANGI ENERGY SYSTEMS
15 PLUMB STREET
MILTON, WI 53563
PH: 608-868-4626
FX: 608-868-2723

THIS DRAWING AND ALL INFORMATION THEREIN IS THE SOLE PROPERTY OF ANGI AND SHOULD NOT BE COPIED, REPRODUCED, OR SUBMITTED TO OTHERS WITHOUT WRITTEN AUTHORIZATION. ALL REPRODUCTIONS ARE SUBJECT TO RETURN ON DEMAND.

UNLESS OTHERWISE SPECIFIED
BREAK SHARP EDGES
ALL DIMENSIONS IN INCHES

| | |
|---|---|
| FRACTIONAL | ±.125 |
| TWO PLACE DECIMAL | ±.010 |
| THREE PLACE DECIMAL | ±.005 |
| ANGLES | ±1° |

| | | | |
|---|---|---|---|
| TITLE | SINGLE LINE/CUSTOMER INTERCONNECT DETAILS ARIEL MINI SKID COMPRESSOR | | |
| CUSTOMER | Pioneer – Bivens, TX | PROJECT NO. | 30974-01 |
| SHEET 1/7 | SCALE NA | DRAWING NO. | REV. |
| DRAWN BY PJH | DATE 2/8/12 | A80-50-30974 | B |

NOTE: ALL WIRE AND CONDUIT RUNS ARE SIZED FOR DISTANCES UP TO 100 FT. CUSTOMER MUST RE-SIZE WIRE AND CONDUIT TO ACCOMMODATE GREATER DISTANCES.

NOTE: ALL ELECTRICAL CONNECTION MUST BE COMPLETED OR SUPERVISED BY QUALIFIED PERSONNEL, AND MEET ALL LOCAL AND APPLICABLE CODES. REFER TO NEC FOR MORE INFORMATION.

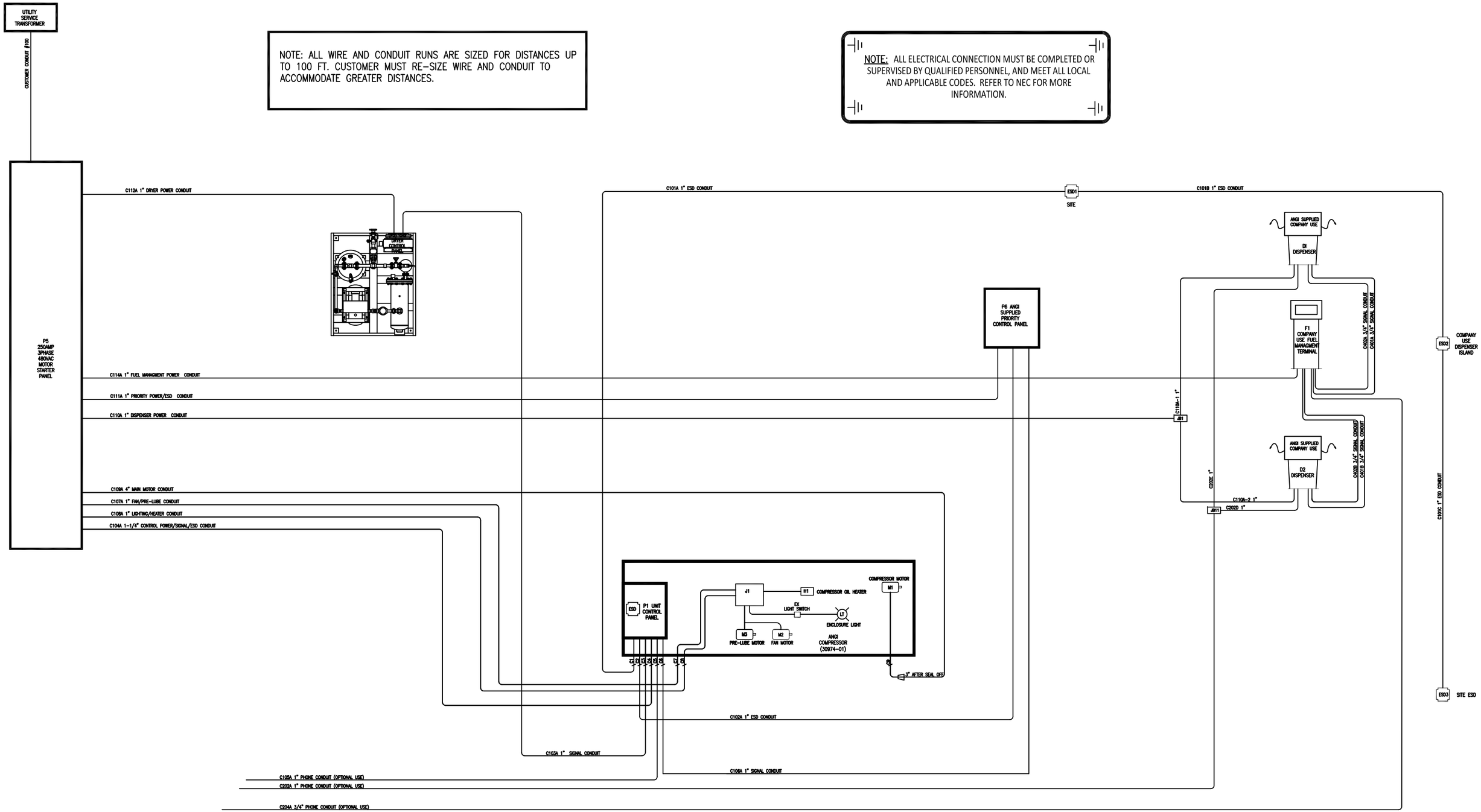


| REV | DATE/BY | DESCRIPTION | REV | DATE/BY | DESCRIPTION |
|---|---|---|---|---|---|
| | | | | | |
| | | | | | |
| B | 9/7/12 PJH | ADD DRYER | | | |
| A | 4/21/12 PJH | UPDATE CONTROL/SIGNAL CONDUIT SIZE<br>ADD SEAL OFF DETAILS | | | |


ANGI ENERGY SYSTEMS
15 PLUMB STREET
MILTON, WI 53563
PH: 608-868-4626
FX: 608-868-2723



THIS DRAWING AND ALL INFORMATION THEREIN IS THE SOLE PROPERTY OF ANGI AND SHOULD NOT BE COPIED, REPRODUCED, OR SUBMITTED TO OTHERS WITHOUT WRITTEN AUTHORIZATION. ALL REPRODUCTIONS ARE SUBJECT TO RETURN ON DEMAND.


UNLESS OTHERWISE SPECIFIED

BREAK SHARP EDGES

ALL DIMENSIONS IN INCHES

| | |
|---|---|
| FRACTIONAL | ±.125 |
| TWO PLACE DECIMAL | ±.010 |
| THREE PLACE DECIMAL | ±.005 |
| ANGLES | ±1° |

| | | | |
|---|---|---|---|
| TITLE | SINGLE LINE/CUSTOMER INTERCONNECT DETAILS<br>ARIEL MINI SKID COMPRESSOR | | |
| CUSTOMER | Pioneer – Bivens, TX | PROJECT NO. | 30974-01 |
| SHEET 2/7 | SCALE NA | DRAWING NO. | REV. |
| DRAWN BY PJH | DATE 2/8/12 | A80-50-30974 | B |

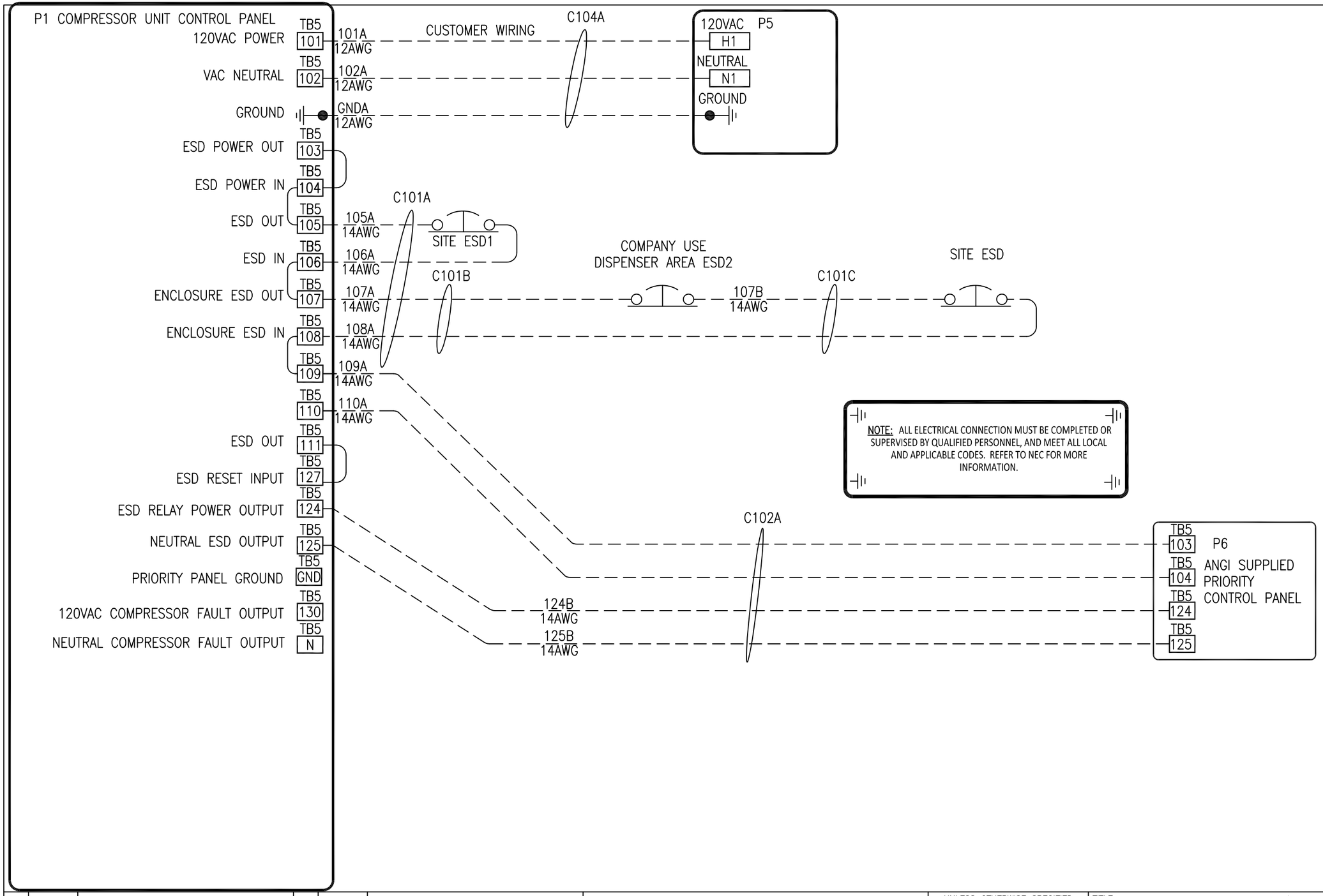


| REV | DATE/BY | DESCRIPTION | REV | DATE/BY | DESCRIPTION |
|---|---|---|---|---|---|
| | | | | | |
| | | | | | |
| | | | | | |
| | | | | | |

ANGI ENERGY SYSTEMS

ANGI ENERGY SYSTEMS
15 PLUMB STREET
MILTON, WI 53563
PH: 608-868-4626
FX: 608-868-2723

THIS DRAWING AND ALL INFORMATION THEREIN IS THE SOLE PROPERTY OF ANGI AND SHOULD NOT BE COPIED, REPRODUCED, OR SUBMITTED TO OTHERS WITHOUT WRITTEN AUTHORIZATION. ALL REPRODUCTIONS ARE SUBJECT TO RETURN ON DEMAND.

UNLESS OTHERWISE SPECIFIED

BREAK SHARP EDGES

ALL DIMENSIONS IN INCHES

| | |
|---|---|
| FRACTIONAL | ±.125 |
| TWO PLACE DECIMAL | ±.010 |
| THREE PLACE DECIMAL | ±.005 |
| ANGLES | ±1° |

| | | | |
|---|---|---|---|
| TITLE | SINGLE LINE/CUSTOMER INTERCONNECT DETAILS ARIEL MINI SKID COMPRESSOR | | |
| CUSTOMER | Pioneer – Bivens, TX | PROJECT NO. | 30974-01 |
| SHEET 3/7 | SCALE NA | DRAWING NO. | REV. |
| DRAWN BY PJH | DATE 2/8/12 | A80-50-30974 | B |

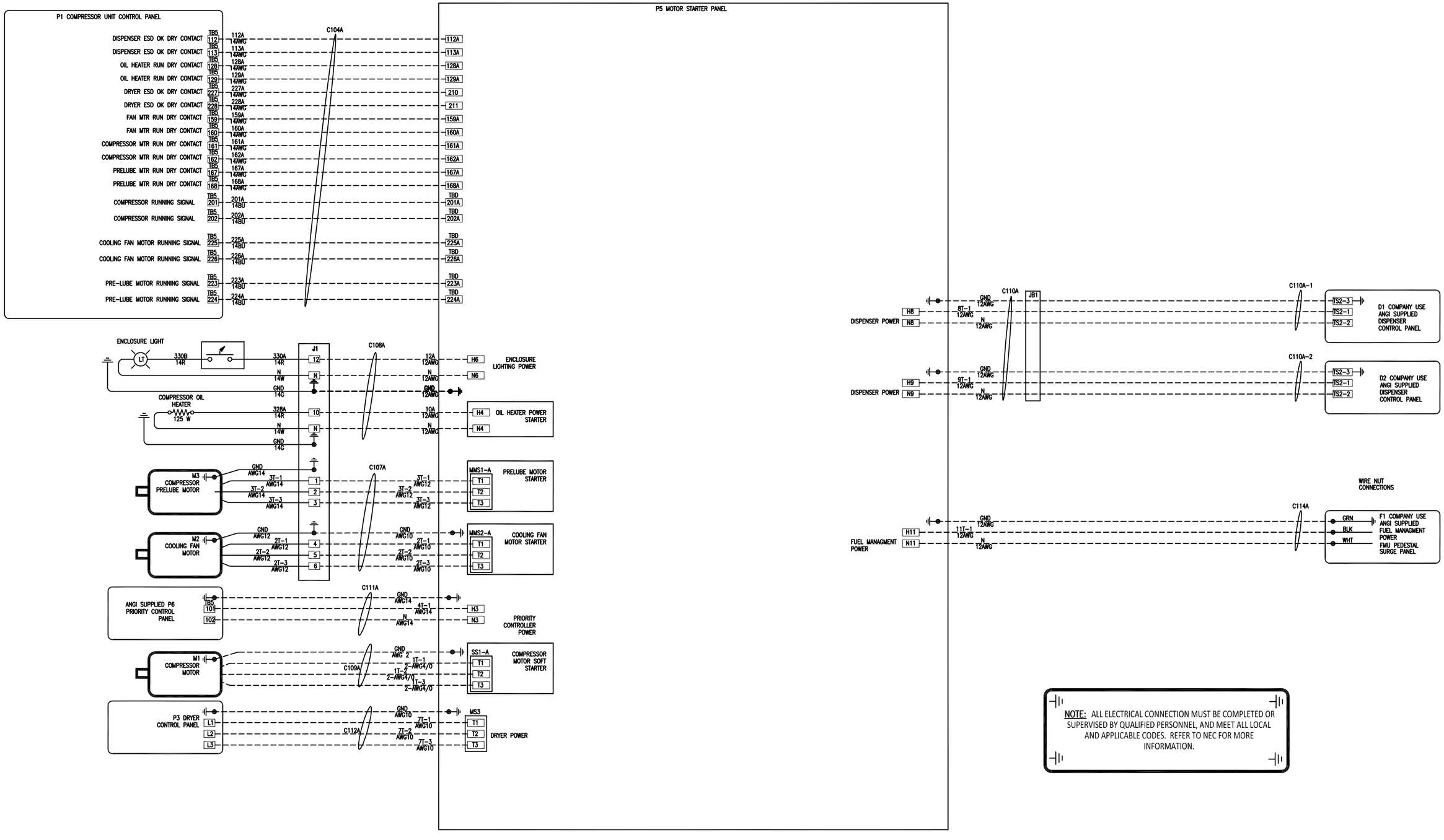


NOTE: ALL ELECTRICAL CONNECTION MUST BE COMPLETED OR SUPERVISED BY QUALIFIED PERSONNEL, AND MEET ALL LOCAL AND APPLICABLE CODES. REFER TO NEC FOR MORE INFORMATION.

| REV | DATE/BY | DESCRIPTION | REV | DATE/BY | DESCRIPTION |
|---|---|---|---|---|---|
| B | 9/7/12 PJH | ADD DRYER | | | |

ANGI ENERGY SYSTEMS
15 PLUMB STREET
MILTON, WI 53563
PH: 608-868-4626
FX: 608-868-2723

THIS DRAWING AND ALL INFORMATION THEREIN IS THE SOLE PROPERTY OF ANGI AND SHOULD NOT BE COPIED, REPRODUCED, OR SUBMITTED TO OTHERS WITHOUT WRITTEN AUTHORIZATION. ALL REPRODUCTIONS ARE SUBJECT TO RETURN ON DEMAND.

UNLESS OTHERWISE SPECIFIED
BREAK SHARP EDGES
ALL DIMENSIONS IN INCHES

| | |
|---|---|
| FRACTIONAL | ±.125 |
| TWO PLACE DECIMAL | ±.010 |
| THREE PLACE DECIMAL | ±.005 |
| ANGLES | ±1° |

| | | | |
|---|---|---|---|
| TITLE | SINGLE LINE/CUSTOMER INTERCONNECT DETAILS ARIEL MINI SKID COMPRESSOR | | |
| CUSTOMER | Pioneer – Bivens, TX | PROJECT NO. | 30974-01 |
| SHEET 4/7 | SCALE NA | DRAWING NO. | REV. |
| DRAWN BY PJH | DATE 2/8/12 | A80-50-30974 | B |

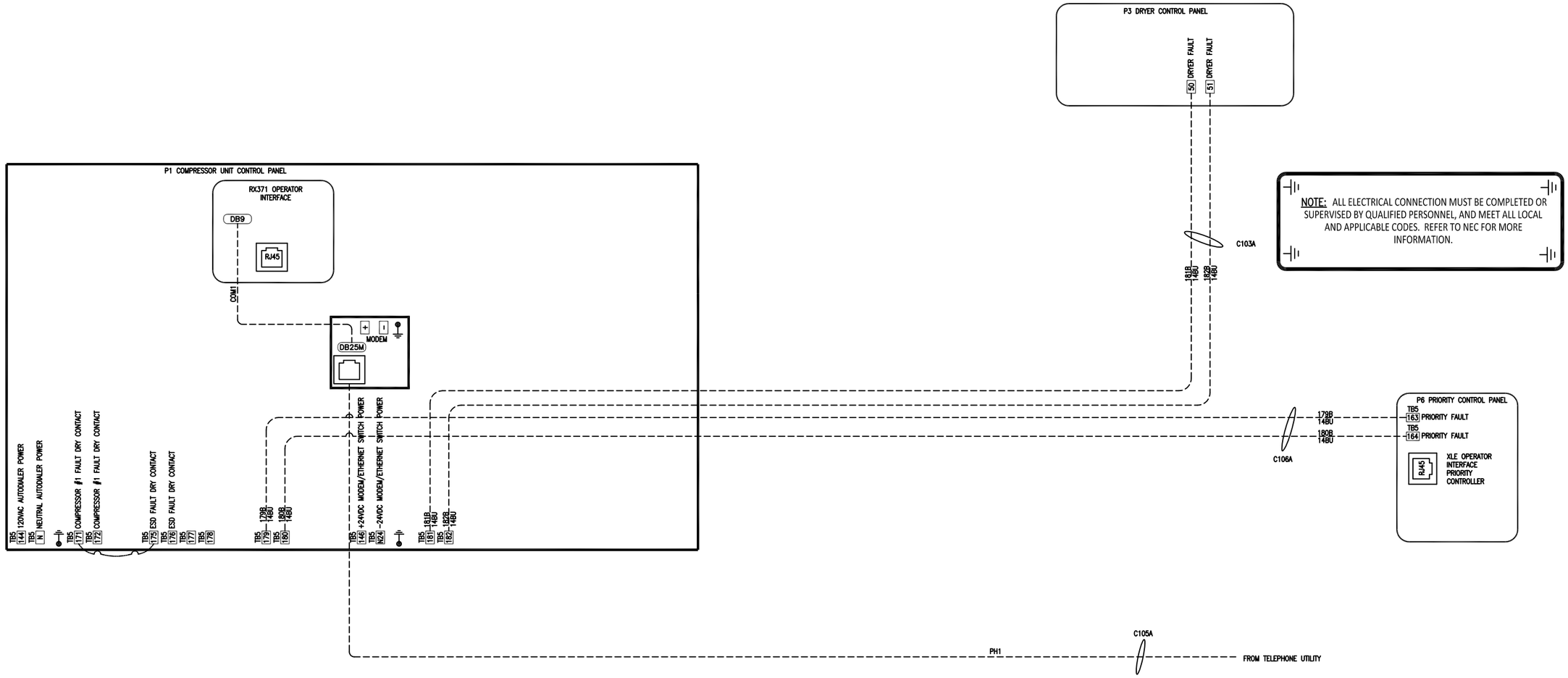


NOTE: ALL ELECTRICAL CONNECTION MUST BE COMPLETED OR SUPERVISED BY QUALIFIED PERSONNEL, AND MEET ALL LOCAL AND APPLICABLE CODES. REFER TO NEC FOR MORE INFORMATION.

| REV | DATE/BY | DESCRIPTION | REV | DATE/BY | DESCRIPTION |
|---|---|---|---|---|---|
| B | 9/7/12 PJH | ADD DRYER | | | |
| A | 4/21/12 PJH | REMOVE WARNING SIGNAL WIRING AND TERMINALS | | | |

ANGI ENERGY SYSTEMS
15 PLUMB STREET
MILTON, WI 53563
PH: 608-868-4626
FX: 608-868-2723

THIS DRAWING AND ALL INFORMATION THEREIN IS THE SOLE PROPERTY OF ANGI AND SHOULD NOT BE COPIED, REPRODUCED, OR SUBMITTED TO OTHERS WITHOUT WRITTEN AUTHORIZATION. ALL REPRODUCTIONS ARE SUBJECT TO RETURN ON DEMAND.

UNLESS OTHERWISE SPECIFIED
BREAK SHARP EDGES
ALL DIMENSIONS IN INCHES

| | |
|---|---|
| FRACTIONAL | ±.125 |
| TWO PLACE DECIMAL | ±.010 |
| THREE PLACE DECIMAL | ±.005 |
| ANGLES | ±1° |

| | | | |
|---|---|---|---|
| TITLE | SINGLE LINE/CUSTOMER INTERCONNECT DETAILS ARIEL MINI SKID COMPRESSOR | | |
| CUSTOMER | Pioneer – Bivens, TX | PROJECT NO. | 30974-01 |
| SHEET 5/7 | SCALE NA | DRAWING NO. | REV. |
| DRAWN BY PJH | DATE 2/8/12 | A80-50-30974 | B |

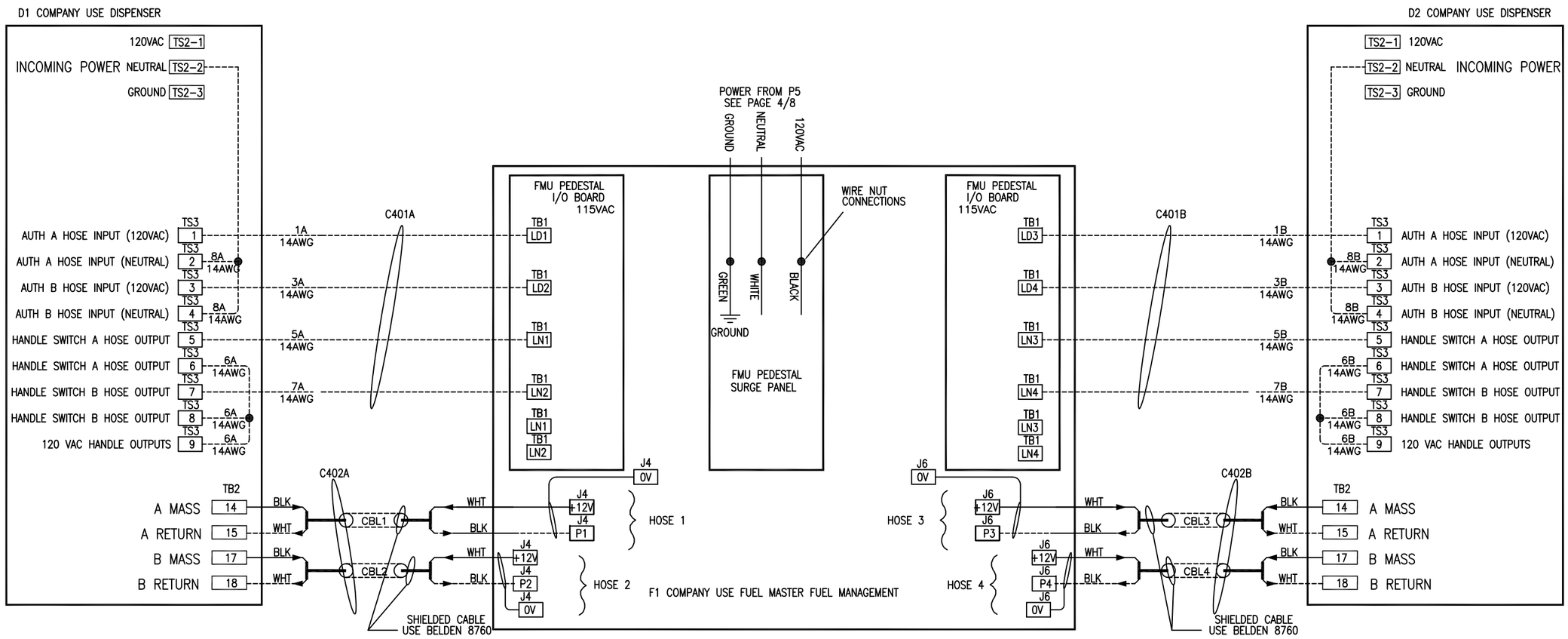


| REV | DATE/BY | DESCRIPTION | REV | DATE/BY | DESCRIPTION |
|---|---|---|---|---|---|
| | | | | | |
| | | | | | |
| | | | | | |
| | | | | | |

ANGI ENERGY SYSTEMS

ANGI ENERGY SYSTEMS
15 PLUMB STREET
MILTON, WI 53563
PH: 608-868-4626
FX: 608-868-2723

THIS DRAWING AND ALL INFORMATION THEREIN IS THE SOLE PROPERTY OF ANGI AND SHOULD NOT BE COPIED, REPRODUCED, OR SUBMITTED TO OTHERS WITHOUT WRITTEN AUTHORIZATION. ALL REPRODUCTIONS ARE SUBJECT TO RETURN ON DEMAND.

UNLESS OTHERWISE SPECIFIED

BREAK SHARP EDGES

ALL DIMENSIONS IN INCHES

| | |
|---|---|
| FRACTIONAL | ±.125 |
| TWO PLACE DECIMAL | ±.010 |
| THREE PLACE DECIMAL | ±.005 |
| ANGLES | ±1° |

| | | | |
|---|---|---|---|
| TITLE | SINGLE LINE/CUSTOMER INTERCONNECT DETAILS ARIEL MINI SKID COMPRESSOR | | |
| CUSTOMER | Pioneer – Bivens, TX | PROJECT NO. | 30974-01 |
| SHEET 6/7 | SCALE NA | DRAWING NO. | REV. |
| DRAWN BY PJH | DATE 2/8/12 | A80-50-30974 | B |

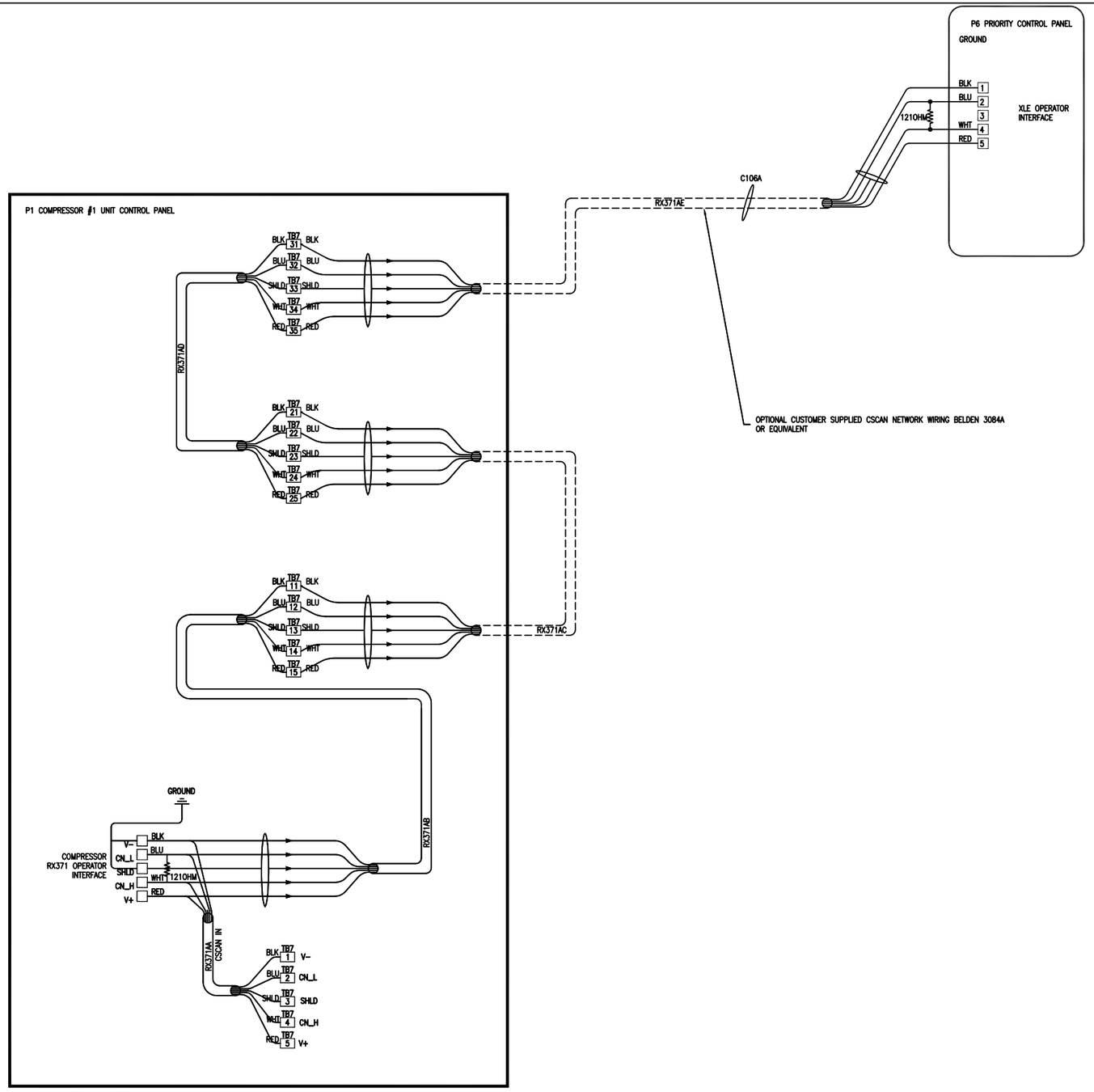


| REV | DATE/BY | DESCRIPTION | REV | DATE/BY | DESCRIPTION |
|---|---|---|---|---|---|
| | | | | | |
| | | | | | |
| | | | | | |
| | | | | | |

ANGI ENERGY SYSTEMS
15 PLUMB STREET
MILTON, WI 53563
PH: 608-868-4626
FX: 608-868-2723

THIS DRAWING AND ALL INFORMATION THEREIN IS THE SOLE PROPERTY OF ANGI AND SHOULD NOT BE COPIED, REPRODUCED, OR SUBMITTED TO OTHERS WITHOUT WRITTEN AUTHORIZATION. ALL REPRODUCTIONS ARE SUBJECT TO RETURN ON DEMAND.

UNLESS OTHERWISE SPECIFIED

BREAK SHARP EDGES

ALL DIMENSIONS IN INCHES

| | |
|---|---|
| FRACTIONAL | ±.125 |
| TWO PLACE DECIMAL | ±.010 |
| THREE PLACE DECIMAL | ±.005 |
| ANGLES | ±1° |

| | | | |
|---|---|---|---|
| TITLE | SINGLE LINE/CUSTOMER INTERCONNECT DETAILS ARIEL MINI SKID COMPRESSOR | | |
| CUSTOMER | Pioneer – Bivens, TX | PROJECT NO. | 30974-01 |
| SHEET 7/7 | SCALE NA | DRAWING NO. | REV. |
| DRAWN BY PJH | DATE 2/8/12 | A80-50-30974 | B |